HK Clamping Element

Clamping elements are designed to be used when holding a position on the rail.



Note! As of April 2023, MC Clamping Element for Linear Rail HRC/ERC/ARC are replaced with the new HK Clamping Elements. Please, download the new CAD files below and see document "New HK Clamping Elements" for more information.

Because of the height difference of different rail guide blocks and to ensure the proper function of the HK Clamping Elements, the use of adapter plates is sometimes needed. See document "Selection of Clamping Elements" for individual block types and whether an adapter plate is needed.

Compatible with Linear Rail HRC/ARC/ERC only.

Dimensions in mm.

Every care has been taken to ensure the accuracy of the information in this document, but we take no liability for any errors or omissions. We reserve the right to make changes without prior notice.

General Data

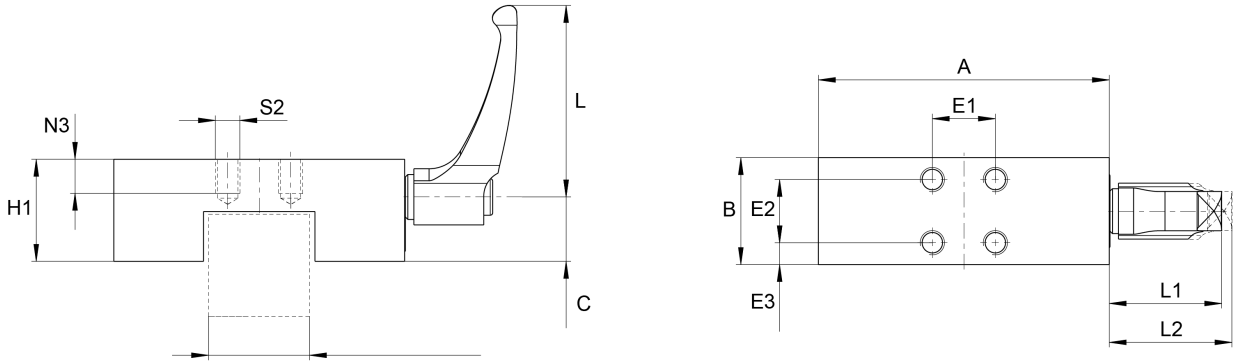

Designation	Remark	Holding Force (N)	Tightening Torque (Nm)	Weight (kg)	Max. Length Clamping
HK1514D	Use Distance Plate PHK15-4 for HRC15MN and HRC15ML.	1200	5.00	0.14	24
HK2005KN	-	750	4.00	0.14	24
HK2005KR	-	1200	5.00	0.22	24
HK2505KN	-	750	4.00	0.14	24
HK2505KR	Use Distance Plate PHK25-4 for HRC25MN and HRC25ML.	1200	7.00	0.39	30
HK3002K	Use Distance Plate PHK30-3 for HRC30MN and HRC30ML.	2000	15.00	0.77	39
HK3505KR	Use Distance Plate PMK35-7 for HRC35MN and HRC35ML.	2000	15.00	0.96	39
HK4501A	Use Distance Plate PHK45-10 for HRC45MN and HRC45ML.	2000	15.00	1.4	44

Designation	Size
HK1514D	15
HK2005KN	20
HK2005KR	20
HK2505KN	25
HK2505KR	25
HK3002K	30
HK3505KR	35
HK4501A	45

Every care has been taken to ensure the accuracy of the information in this document, but we take no liability for any errors or omissions. We reserve the right to make changes without prior notice.

Dimensions

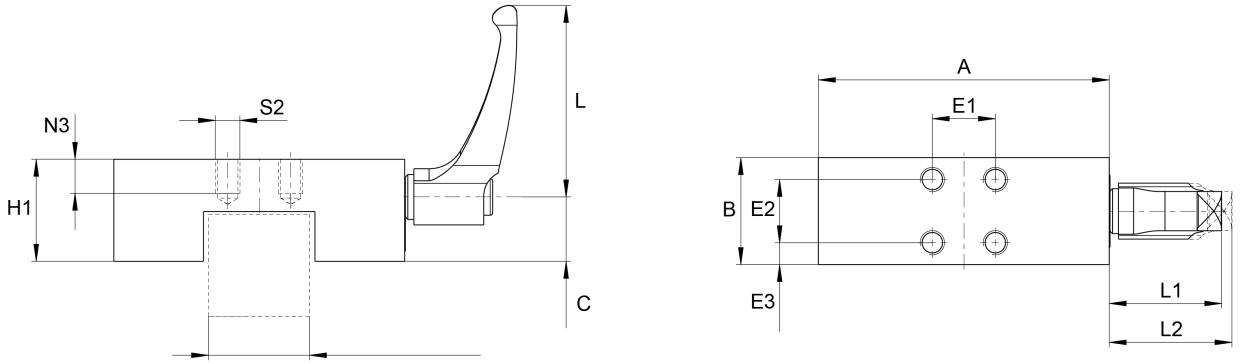

Designation	A	C	B	H1	N3	S2	E1	E2	E3
HK1514D	47	13.3	24	17.5	5	M4	17	17	4
HK2005KN	42	14.3	24	18	5	M5	15	15	4.5
HK2005KR	60	17.5	24	23	6	M5	15	15	4.5
HK2505KN	42	14.3	24	18	5	M5	15	15	4.5
HK2505KR	70	22.3	30	29	7	M6	20	20	5
HK3002K	90	23.6	39	32	8	M6	22	22	8.5
HK3505KR	100	31	39	41	10	M8	24	24	7.5
HK4501A	120	32.6	44	44	14	M10	26	26	9

Designation	L	L1	L2
HK1514D	44	30.5	33.5
HK2005KN	44	30.5	33.5
HK2005KR	44	30.5	33.5
HK2505KN	44	30.5	33.5
HK2505KR	63	38.5	41.5
HK3002K	78	46.5	50.5
HK3505KR	78	46.5	50.5
HK4501A	78	46.5	50.5

Every care has been taken to ensure the accuracy of the information in this document, but we take no liability for any errors or omissions. We reserve the right to make changes without prior notice.