Rollers CPN-CPA

Available individually in all sizes as eccentric or concentric rollers. Prismatic roller for T- and U-rail.
Roller seals: Standard 2Z (2ZR for size 63) is the steel cover disc, which is supplied on all standard sliders.
For dusty environment and splash-proof applications, 2RS rubber seal rollers are available.
Rollers are lubricated for life



Dimensions in mm.

Material: Steel 100Cr6. Also available in stainless steel AISI 440.

Every care has been taken to ensure the accuracy of the information in this document, but we take no liability for any errors or omissions. We reserve the right to make changes without prior notice.

General Data

Designation	Size	Roller Type	Material
CPN18-2RS	18	Concentric	Steel
CXPNX18-2RS	18	Concentric	Stainless steel
CPN18-2Z	18	Concentric	Steel
CPA18-2RS	18	Eccentric	Steel
CXPAX18-2RS	18	Eccentric	Stainless steel
CPA18-2Z	18	Eccentric	Steel
CPN28-2RS	28	Concentric	Steel
CXPNX28-2RS	28	Concentric	Stainless steel
CPN28-2Z	28	Concentric	Steel
CPA28-2RS	28	Eccentric	Steel
CXPAX28-2RS	28	Eccentric	Stainless steel
CPA28-2Z	28	Eccentric	Steel
CPN43-2RS	43	Concentric	Steel
CXPNX43-2RS	43	Concentric	Stainless steel
CPN43-2Z	43	Concentric	Steel
CPA43-2RS	43	Eccentric	Steel
CXPAX43-2RS	43	Eccentric	Stainless steel
CPA43-2Z	43	Eccentric	Steel
CPN63-2ZR	63	Concentric	Steel
CXPNX63-2RS	63	Concentric	Stainless steel
CPA63-2ZR	63	Eccentric	Steel
CXPAX63-2RS	63	Eccentric	Stainless steel

Dimensions

Version

Prismatic (T- and U-rail)

CPN
Concentric roller

CPA
Eccentric roller

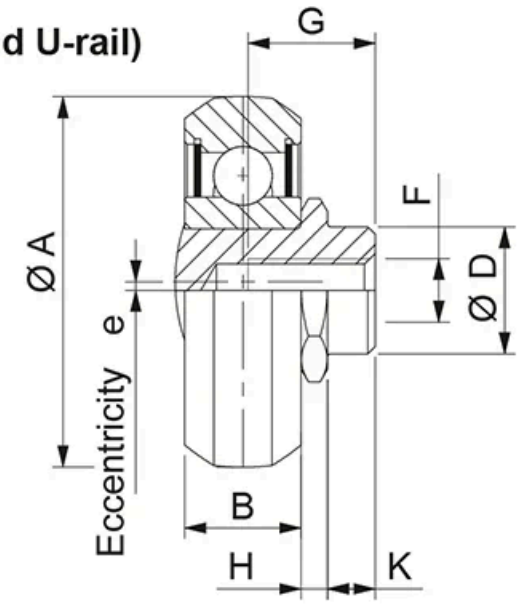

Designation	A	B	D	e	H	G	F	K
CPN18-2RS	14	4	6	-	1.55	5.5	M4	1.8

Every care has been taken to ensure the accuracy of the information in this document, but we take no liability for any errors or omissions. We reserve the right to make changes without prior notice.

Designation	A	B	D	e	H	G	F	K
CXPNX18-2RS	14	4	6	-	1.55	5.5	M4	1.8
CPN18-2Z	14	4	6	-	1.55	5.5	M4	1.8
CPA18-2RS	14	4	6	0.4	1.55	5.5	M4	1.8
CXPAX18-2RS	14	4	6	0.4	1.55	5.5	M4	1.8
CPA18-2Z	14	4	6	0.4	1.55	5.5	M4	1.8
CPN28-2RS	23.2	7	10	-	2.2	7	M5	3.8
CXPNX28-2RS	23.2	7	10	-	2.2	7	M5	3.8
CPN28-2Z	23.2	7	10	-	2.2	7	M5	3.8
CPA28-2RS	23.2	7	10	0.6	2.2	7	M5	3.8
CXPAX28-2RS	23.2	7	10	0.6	2.2	7	M5	3.8
CPA28-2Z	23.2	7	10	0.6	2.2	7	M5	3.8
CPN43-2RS	35	11	12	-	2.5	12	M6	4.5
CXPNX43-2RS	35	11	12	-	2.5	12	M6	4.5
CPN43-2Z	35	11	12	-	2.5	12	M6	4.5
CPA43-2RS	35	11	12	0.8	2.5	12	M6	4.5
CXPAX43-2RS	35	11	12	0.8	2.5	12	M6	4.5
CPA43-2Z	35	11	12	0.8	2.5	12	M6	4.5
CPN63-2ZR	50	17.5	18	-	2.3	16	M8	6
CXPNX63-2RS	50	17.5	18	-	2.3	16	M8	6
CPA63-2ZR	50	17.5	18	1.2	2.3	16	M10	6
CXPAX63-2RS	50	17.5	18	1.2	2.3	16	M10	6

Load & Weight

Designation	C (N)	C0rad (N)	Weight (kg)
CPN18-2RS	765	410	0.004
CXPNX18-2RS	765	410	0.004
CPN18-2Z	765	410	0.004
CPA18-2RS	765	410	0.004
CXPAX18-2RS	765	410	0.004
CPA18-2Z	765	410	0.004
CPN28-2RS	2130	1085	0.019
CXPNX28-2RS	2130	1085	0.019
CPN28-2Z	2130	1085	0.019
CPA28-2RS	2130	1085	0.019
CXPAX28-2RS	2130	1085	0.019
CPA28-2Z	2130	1085	0.019
CPN43-2RS	6140	2750	0.06
CXPNX43-2RS	6140	2750	0.06
CPN43-2Z	6140	2750	0.06
CPA43-2RS	6140	2750	0.06
CXPAX43-2RS	6140	2750	0.06
CPA43-2Z	6140	2750	0.06
CPN63-2ZR	15375	6250	0.19
CXPNX63-2RS	15375	6250	0.19

Every care has been taken to ensure the accuracy of the information in this document, but we take no liability for any errors or omissions. We reserve the right to make changes without prior notice.

Designation	C (N)	C0rad (N)	Weight (kg)
CPA63-2ZR	15375	6250	0.19
CXPAX63-2RS	15375	6250	0.19

Assembly Dimensions & Tolerances

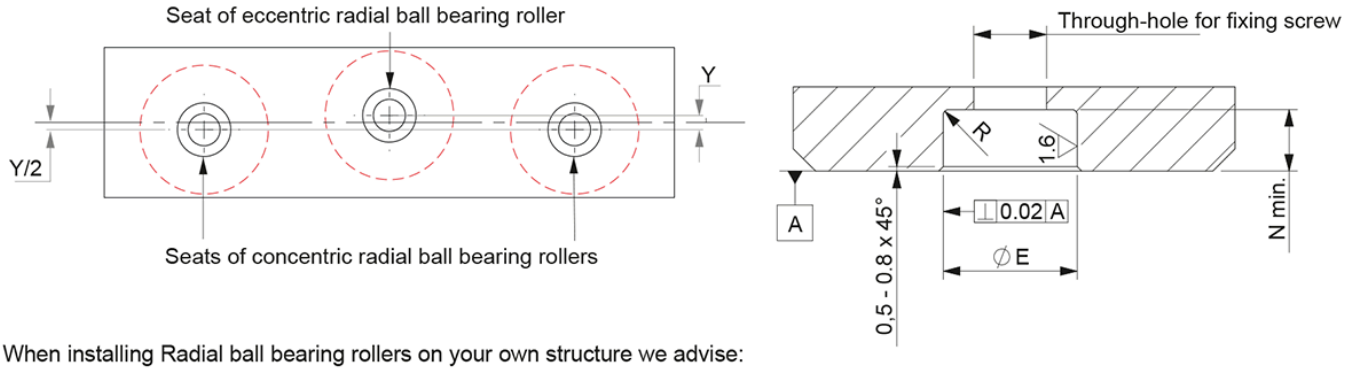

When installing Radial ball bearing rollers on your own structure we advise:

- Using a maximum of 2 concentric radial ball bearing rollers.
- Offset the seats of the concentric radial ball bearing rollers with respect to those of the eccentric radial ball bearing rollers according to the information below.

Designation	Y	E	N min.	Radius R
CPN18-2RS	0.30	6 + 0.025/+0.01	2.1	0.5
CXPNX18-2RS	0.30	6 + 0.025/+0.01	2.1	0.5
CPN18-2Z	0.30	6 + 0.025/+0.01	2.1	0.5
CPA18-2RS	0.30	6 + 0.025/+0.01	2.1	0.5
CXPAX18-2RS	0.30	6 + 0.025/+0.01	2.1	0.5
CPA18-2Z	0.30	6 + 0.025/+0.01	2.1	0.5
CPN28-2RS	0.64	10 + 0.03/+0.01	4.0	0.5
CXPNX28-2RS	0.64	10 + 0.03/+0.01	4.0	0.5
CPN28-2Z	0.64	10 + 0.03/+0.01	4.0	0.5
CPA28-2RS	0.64	10 + 0.03/+0.01	4.0	0.5
CXPAX28-2RS	0.64	10 + 0.03/+0.01	4.0	0.5
CPA28-2Z	0.64	10 + 0.03/+0.01	4.0	0.5
CPN43-2RS	0.72	12 + 0.05/+0.02	5.5	1
CXPNX43-2RS	0.72	12 + 0.05/+0.02	5.5	1
CPN43-2Z	0.72	12 + 0.05/+0.02	5.5	1
CPA43-2RS	0.72	12 + 0.05/+0.02	5.5	1
CXPAX43-2RS	0.72	12 + 0.05/+0.02	5.5	1
CPA43-2Z	0.72	12 + 0.05/+0.02	5.5	1
CPN63-2ZR	0.55	18 + 0.02/-0.02	7	1
CXPNX63-2RS	0.55	18 + 0.02/-0.02	7	1
CPA63-2ZR	0.55	18 + 0.02/-0.02	7	1
CXPAX63-2RS	0.55	18 + 0.02/-0.02	7	1

Every care has been taken to ensure the accuracy of the information in this document, but we take no liability for any errors or omissions. We reserve the right to make changes without prior notice.