WH

Dimensions in mm.

Other types available on request.

Contact us for CAD-files.

Material: Quenched and tempered steel C60 / 1.1221
Surface hardness: 59 HRC min. Hardening depth according to DIN ISO 18203.
Standard Tolerance: ISO h6



Every care has been taken to ensure the accuracy of the information in this document, but we take no liability for any errors or omissions. We reserve the right to make changes without prior notice.

General Data

Designation	Weight (kg/m)
WH12	0.79
WH16	1.28
WH20	1.25
WH25	2.35
WH30	3.5
WH40	4.99
WH50	9.91

Dimensions

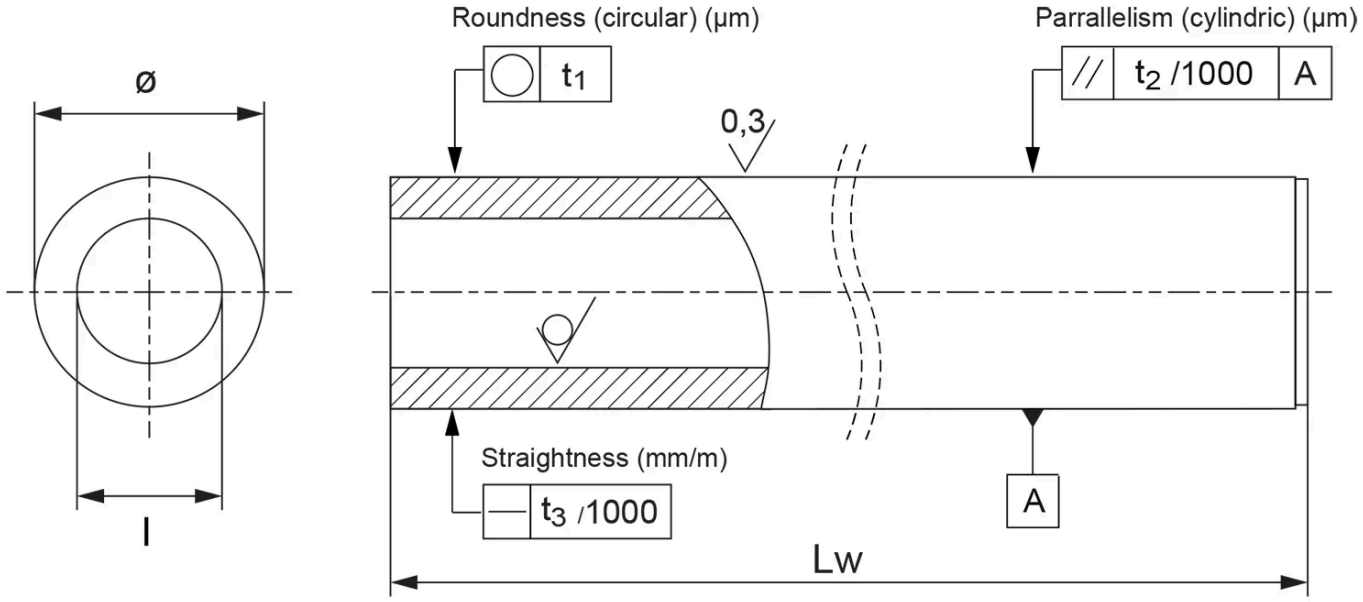

Designation	Lw (mm)	Diameter	Inner Diameter	Hardening Depth (mm)	Roundness t1 (µm)	Parallelism t2 (µm)	Straightness t3 (mm/m)
WH12	6000	12	4	0.6	8	8	0.3
WH16	6000	16	7	0.6	8	8	0.3
WH20	6000	20	14	0.9	9	9	0.3
WH25	6000	25	15.6	0.9	9	9	0.3
WH30	6000	30	18.3	0.9	9	9	0.3
WH40	6000	40	28	1.5	11	11	0.3
WH50	6000	50	29.7	1.5	11	11	0.2

Every care has been taken to ensure the accuracy of the information in this document, but we take no liability for any errors or omissions. We reserve the right to make changes without prior notice.