Linear Unit QME – Right+ Left drive

QME with right + left drive is a ready to mount positioning table guided with linear ball bearings on hardened shafts and driven by ball-or lead screw. QME can be manually driven by handwheel using either ball screw or lead screw. For drive by motor, the ball screw versions are strongly recommended for sustained performance and precision.

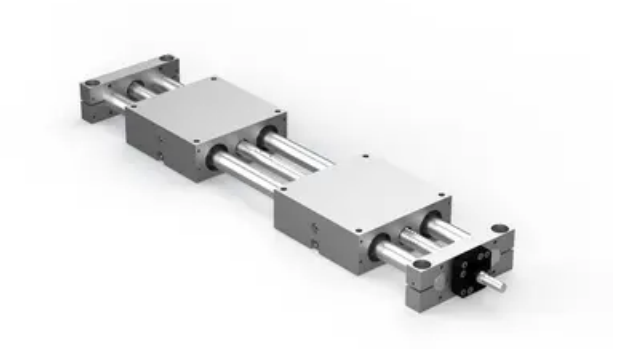

Customized machining of the drive- and mounting interfaces, higher level of corrosion resistance or low/high temperature versions, please contact Rollco.

Note that “stroke” for a R+L unit refers to the stroke of each individual slider.

Bellow for Linear Unit QME is recommended for all applications where the unit isn’t protected against dust and dirt. The bellow may also work as a pinch protection.

All dimensions in mm.

QME12-2xstroke: Max. L tot: 1 000 mm
QME20-2xstroke: Max. L tot: 1 500 mm
QME30-2xstroke: Max. L tot: 2 000 mm

Every care has been taken to ensure the accuracy of the information in this document, but we take no liability for any errors or omissions. We reserve the right to make changes without prior notice.

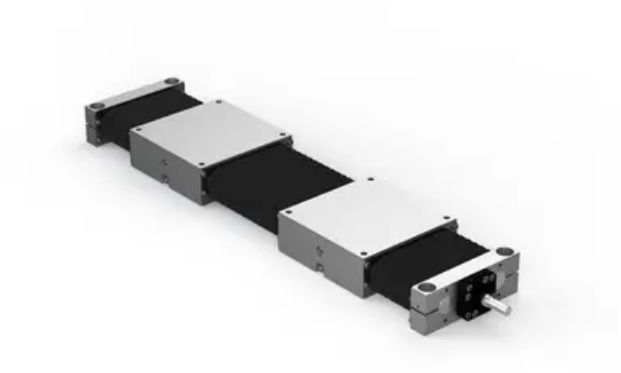

General Data

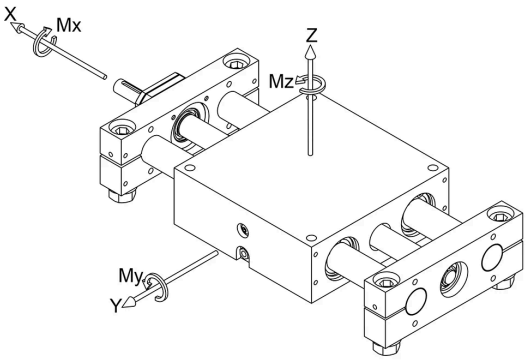

Permissible load Fz and Fy

Permissible load based on a shaft deflection of 1/1000 of Ltot. For long units, actual load may need to be reduced to achive a deflection acceptable for the application.
Please note that the graph below refers to an entire unit and not per slider.

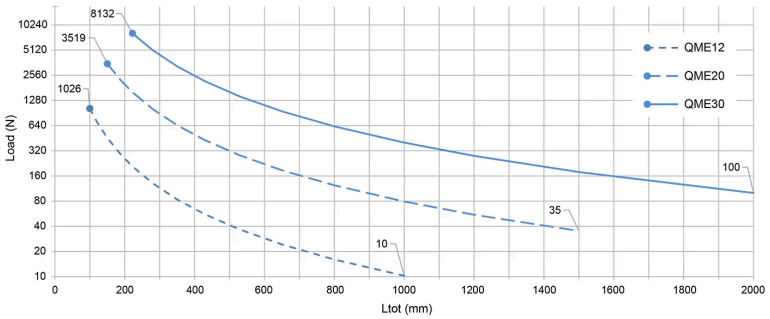

All capacity values are based on the individual ratings of the linear ball bearings used inside the QME and are without any safety factor. The usable load level depends on required service life and the system configuration. The safety factor depends on the application and its requested safety. We recommend a minimum dynamic safety factor 5.

Note! The values in the table below for a Right+Left Unit are given per slider.

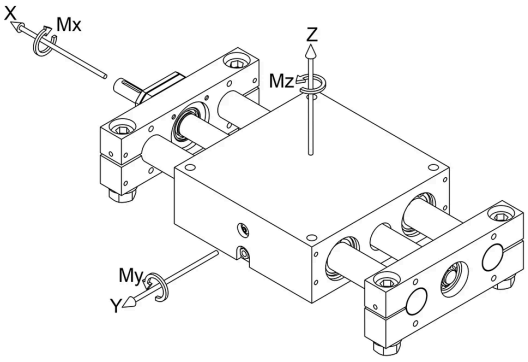

Permissible load Fx

Permissible load is based on the buckling limit of the drive screw.
For QME30, buckling will never occur due to the use of oversized drive screws.

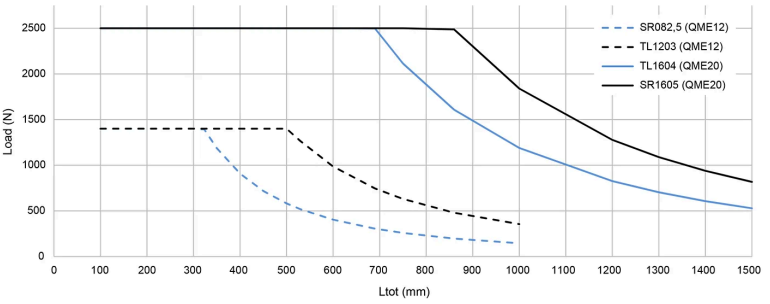

All capacity values are based on the individual ratings of the linear ball bearings used inside the QME and are without any safety factor. The usable load level depends on required service life and the system configuration. The safety factor depends on the application and its requested safety. We recommend a minimum dynamic safety factor 5.

Note! The values in the table below for a Right+Left Unit are given per slider.

Designation	Screw Type	Static Load Capacity Fz (N)	Dynamic Load Capacity Fz (N)	Static Load Capacity Fy (N)	Dynamic Load Capacity Fy (N)
QME12-2xStroke	TR/TL1203	3160	2080	3160	2080
QME20-2xStroke	TR/TL1604	5600	3520	5600	3520
QME30-2xStroke	SR/SL3205	11200	6400	11200	6400

Every care has been taken to ensure the accuracy of the information in this document, but we take no liability for any errors or omissions. We reserve the right to make changes without prior notice.

Designation	Static Load Capacity Mx (Nm)	Dynamic Load Capacity Mx (Nm)	Static Load Capacity My (Nm)	Dynamic Load Capacity My (Nm)	Static Load Capacity Mz (Nm)	Dynamic Load Capacity Mz (Nm)
QME12-2xStroke	71	47	74	49	74	49
QME20-2xStroke	202	127	216	136	216	136
QME30-2xStroke	728	416	678	387	678	387

Designation	Dynamic Capacity Ca (N)	Permissible Fx (N)
QME12-2xStroke	2030 (n/a for TR)	1400
QME20-2xStroke	7100 (n/a for TR)	2500
QME30-2xStroke	9500 (n/a for TR)	3200

Dimensions

QME12-2xStroke

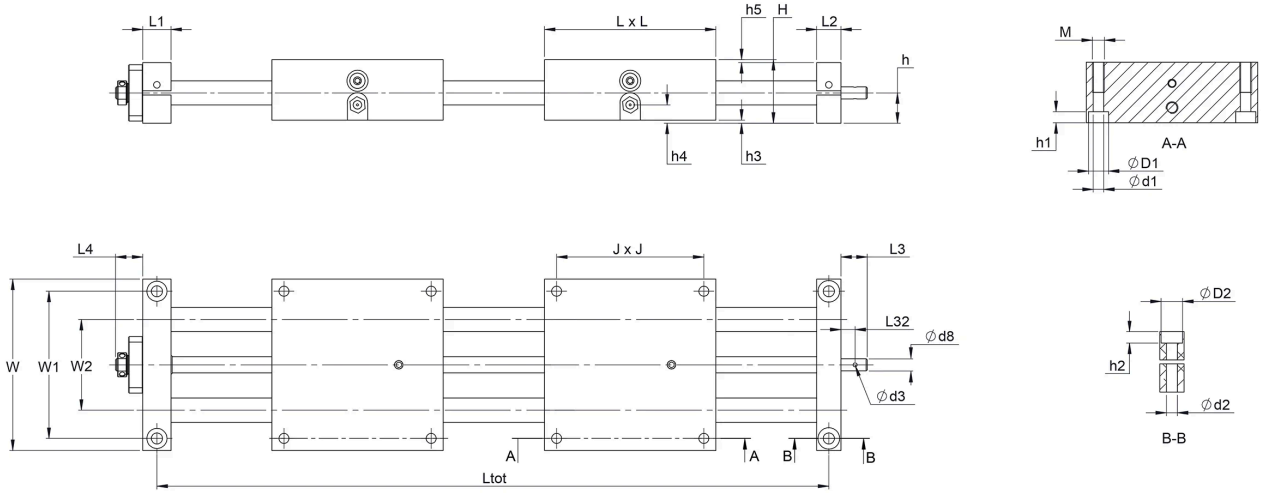

QME20-2xStroke & QME30-2xStroke

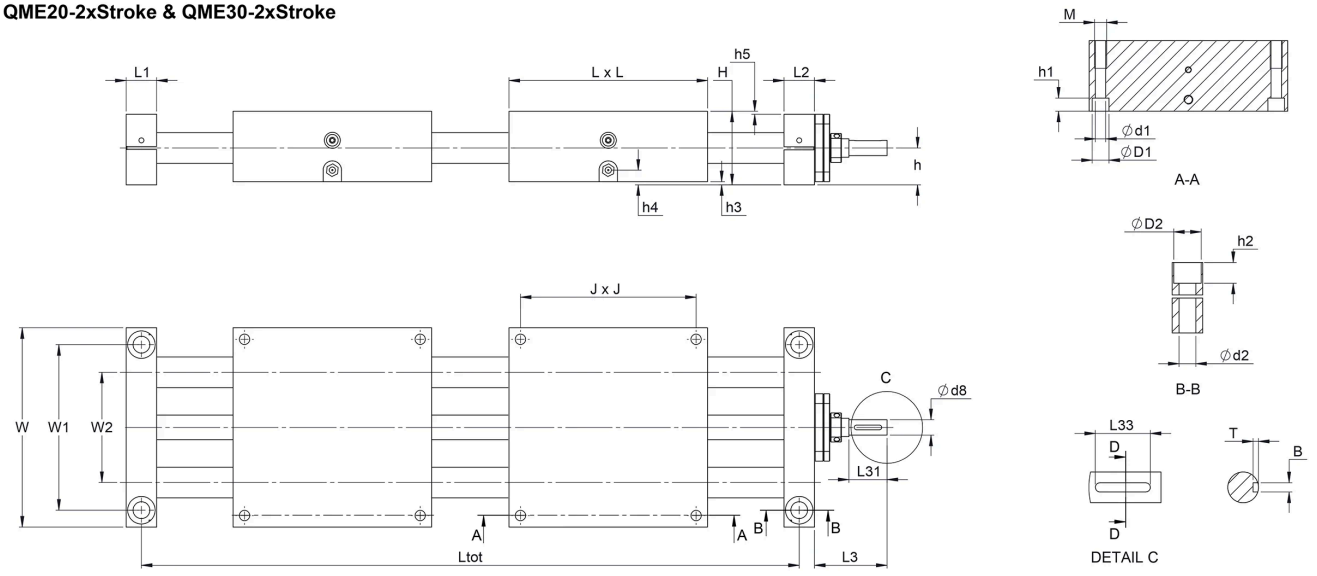

Every care has been taken to ensure the accuracy of the information in this document, but we take no liability for any errors or omissions. We reserve the right to make changes without prior notice.

Stroke definition right/left

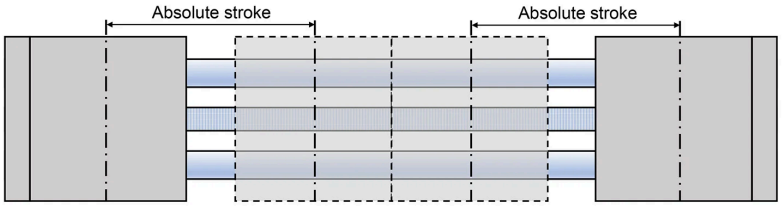

Working stroke: Is the working stroke of the application.
Absolute stroke: Is defined as Working stroke + Stroke reserve.
Stroke reserve: Is a safety distance to the mechanical end positions.

	Max. Ltot	Max. absolute stroke	
		no bellow	with bellow
QME12-2xStroke	1 000 mm	409 mm	310 mm
QME20-2xStroke	1 500 mm	610 mm	486 mm
QME30-2xStroke	2 000 mm	789 mm	659 mm

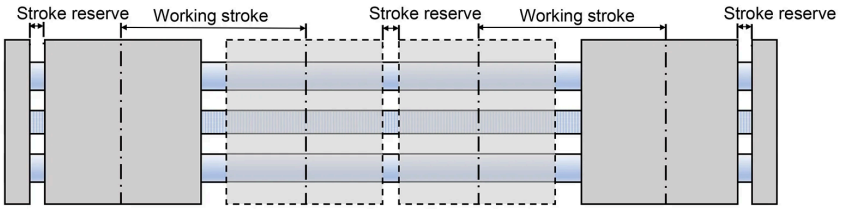

Designation	Ltot	Bellow Ltot	B (P9)x L33 x T	D1	d1	D2	d2	d3	d8
QME12-2xStroke	Absolute stroke *2+183	Absolute stroke *2.56+206	-	10	5.2	10	5.5	2	6 (h7)
QME20-2xStroke	Absolute stroke *2+280	Absolute stroke *2.46+303	3 x 18 x 1.8	11	6.8	18	11	-	10(h7)
QME30-2xStroke	Absolute stroke *2+422	Absolute stroke *2.36+445	5 x 36 x 3	11	6.8	20	13	-	16(h7)

Designation	H	h	h1	h2	h3	h4	h5	J	L	L1
QME12-2xStroke	31.5	15	5.5	5.7	1.5	7.5	1.5	73	85	12
QME20-2xStroke	48	24	8	13.5	2	7.5	2	115	130	20
QME30-2xStroke	71	36	8	14	2	15	1	184	200	22

Designation	L2	L3	L4	L31	L32	M	W	W1	W2
QME12-2xStroke	14	13	13.5	-	7	M6 x 15	85	73	45
QME20-2xStroke	20	47.5	-	25	-	M8 x 18	130	108	72
QME30-2xStroke	22	80	-	45	-	M8 x 20	200	178	130

Weight

Designation	Zero stroke (kg)	Moving part (kg)	+/100 mm stroke (kg)	Remark
QME12-2xStroke	1.72 / 1.76 with bellows	0.55 / 0.57 with bellows	0.43 / 0.55 with bellows	Masses may deviate +/- 5% depending on screw type and other options.
QME20-2xStroke	5.92 / 6.00 with bellows	1.76 / 1.80 with bellows	1.29 / 1.59 with bellows	Masses may deviate +/- 5% depending on screw type and other options.
QME30-2xStroke	20.2 / 20.5 with bellows	5.77 / 5.91 with bellows	3.46 / 4.08 with bellows	Masses may deviate +/- 5% depending on screw type and other options.

Every care has been taken to ensure the accuracy of the information in this document, but we take no liability for any errors or omissions. We reserve the right to make changes without prior notice.