Linear Unit MTJ 40

The MTJ linear units have toothed belt drive and compact dimensions to provide high performance features such as high speed and good accuracy. The unit MTJ have a pre-tensioned steel reinforced AT polyurethane timing toothed belt.
In conjunction with a zero-backlash drive pulley high moments with alternating loads with good positioning accuracy, low wear and low noise can be realized.



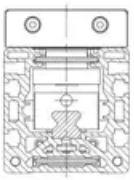

All parts in the profile are protected from dust and other contaminations. As corrosion-resistant protection strip is available as option.

Dimensions in mm.

Modulus of Elasticity: E = 70000 N / mm2
Operating Temperature (°C): 0 ~ +60 For operating temperature out of the presented range, please contact Rollco.
Duty Cycle: 100%
Max. Acceleration (m/s²): 50 (Optional, acceleration up to 70 m/s² possible if used without INOX seal strip)
Max. Travel Speed (m/s): 1.5 (Optional, travel speed up to 6 m/s possible if used without INOX seal strip)

Every care has been taken to ensure the accuracy of the information in this document, but we take no liability for any errors or omissions. We reserve the right to make changes without prior notice.

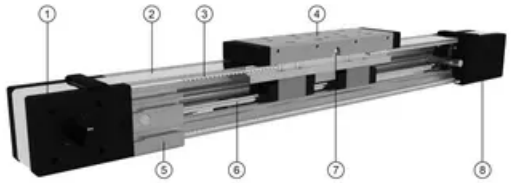

1. Drive block with pulley
2. Corrosion-resistant protection strip (available also without protection strip)
3. AT polyurethane toothed belt with steel tension cords
4. Carriage with built in magnets
5. Aluminium profile-hard anodized
6. Linear ball guideway
7. Central lubrication port, both sides
8. Tension end with integrated belt tensioning system

Deflection of the linear unit

Fixed - fixed mounting

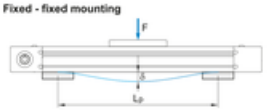

Fixed - free mounting

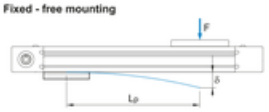

δ Maximum deflection of the linear unit [mm]
δmax Maximum permissible deflection of the linear unit [mm]
F Applied force [N]
Lp Unsupported profile length [mm]

The maximum permissible deflection δmax must not be exceeded. In the case that maximum deflection δ exceeds the maximum permissible deflection δmax additional profile supports are needed.

Deflection of the linear unit

MTJ 40

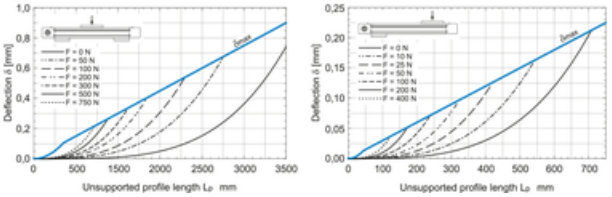

① *The linear units do not include any safetey stroke.*
Absolut stroke = Effective stroke + 2 x safety stroke.

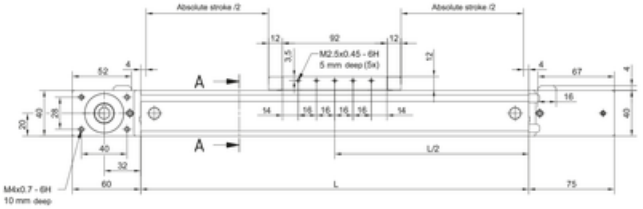

① *Lifetime lubricated*

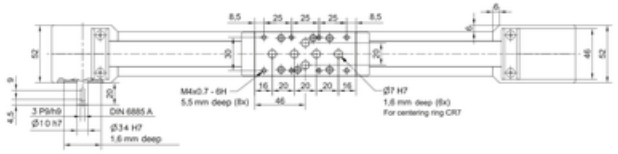

① *Journal with or without keyway.*

① *All dimensions in mm. Drawings scales are not equal.*

TYPE 0

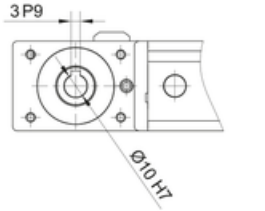

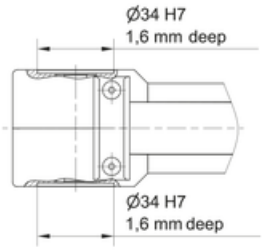

Every care has been taken to ensure the accuracy of the information in this document, but we take no liability for any errors or omissions. We reserve the right to make changes without prior notice.

TYPE 1 L and 1 R

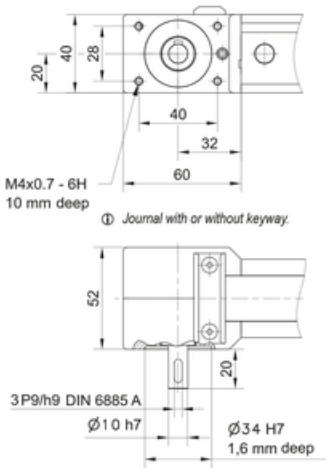

TYPE 2

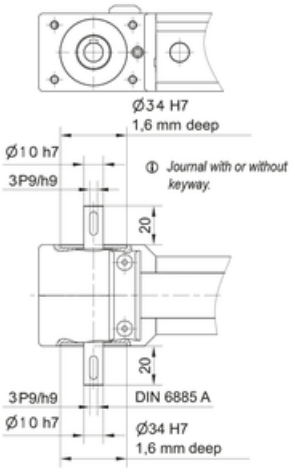

MTJ 40

A-A

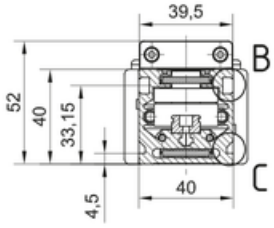

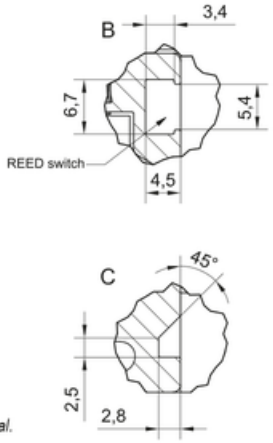

① *All dimensions in mm. Drawings scales are not equal.*

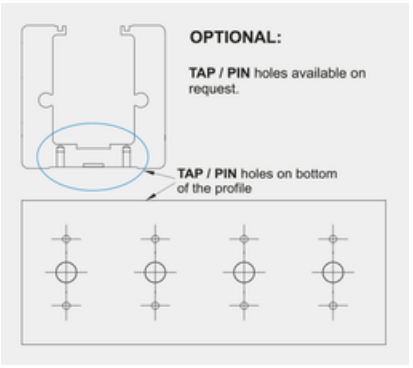



Defining of the linear unit length

L = Effective stroke + 2 × Safety stroke + Lv + 32 mm **Lv = 92 mm**

Ltotal = L + 135 mm

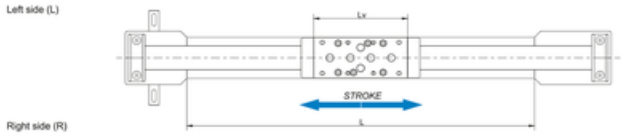

Double-Carriage

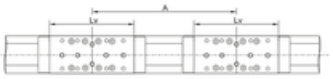

L = Effective stroke + 2 × Safety stroke + Lv + A + 32 mm

Ltotal = L + 135 mm

A ≥ Lv + 24 mm

Every care has been taken to ensure the accuracy of the information in this document, but we take no liability for any errors or omissions. We reserve the right to make changes without prior notice.

General data

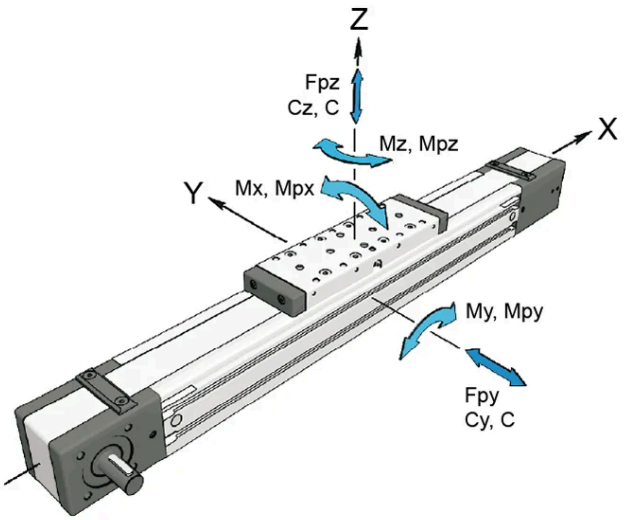

For lengths/stroke over the stated value in the table, please contact Rollco. Values for max. stroke are not valid for double carriage (equation of defining the linear unit length for particular size of the linear unit needs to be used).

For minimum stroke below the stated value In the table, please contact Rollco.

Recommended values of loads

All the data of static and dynamic moments and load capacities stated in the table are theoretical without considering any safety factor. The safety factor depends on the application and its requested safety. We recommend a minimum safety factor (fs =5.0).

Modulus of elasticity
E = 70000 N / mm^2

Designation	Carriage Length Lv (mm)	Dynamic Moment Mx (Nm)	Dynamic Moment My (Nm)	Dynamic Moment Mz (Nm)	Dynamic Load Capacity C (N)
MTJ 40	92	28	90	90	4610

Designation	Static Load Capacity C0 (N)	Max. Permissible Loads Forces Fpy (N)	Max. Permissible Loads Forces Fpz (N)	Max. Permissible Loads Moments Mpx (Nm)	Max. Permissible Loads Moments Mpy (Nm)	Max. Permissible Loads Moments Mpz (Nm)
MTJ 40	6930	3840	3850	14	75	75

Designation	Moved Mass (kg)	Max. Repeatability (mm)	Max. Length Lmax (mm)	Max. Stroke (mm)	Min. Stroke (mm)
MTJ 40	0.28	± 0.08	3000	2876	25

General data double carriage

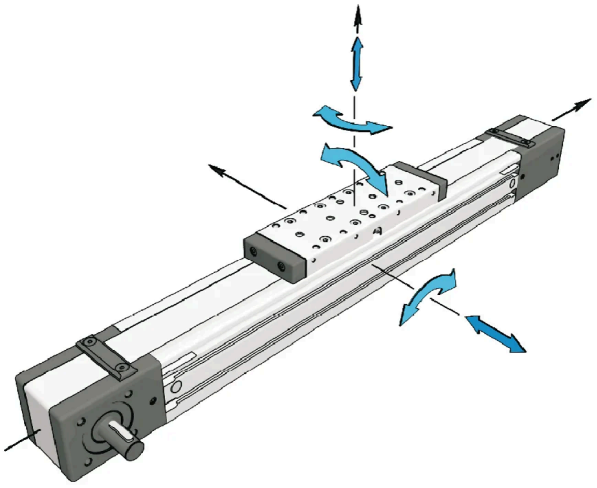

A - Distance between carriages.

Max. travel speed and max. acceleration of linear unit with the corrosion-resistant protection strip is 1,5 m/s and 50 m/s^2 respectively.

The stated values are for strokes up to 500 mm. No load torque value increases with stroke elongation.

Max. acceleration (m/s^2): 70

For acceleration over the stated value, please contact Rollco.

Every care has been taken to ensure the accuracy of the information in this document, but we take no liability for any errors or omissions. We reserve the right to make changes without prior notice.

Designation	Carriage version	Dynamic Load Capacity C (N)	Static Load Capacity C0 (N)	Dynamic Moment Mx (Nm)	Dynamic Moment My (Nm)
MTJ 40	2	9220	13860	57	4.6 × A (mm)

Designation	Dynamic Moment Mz (Nm)	Max. Permissible Loads Forces Fpy (N)	Max. Permissible Loads Forces Fpz (N)	Max. Permissible Loads Moments Mpx (Nm)	Max. Permissible Loads Moments Mpy (Nm)	Max. Permissible Loads Moments Mpz (Nm)
MTJ 40	4.6 × A (mm)	7690	7690	28	3.8 × A (mm)	3.8 × A (mm)

Drive data

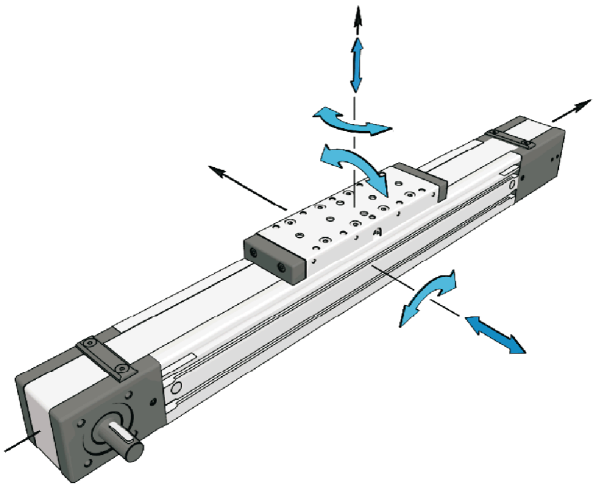

Max. travel speed and max. acceleration of linear unit with the corrosion-resistant protection strip is 1,5 m/s and 50 m/s^2 respectively.

The stated values are for strokes up to 500 mm. No load torque value increases with stroke elongation.

Max. acceleration (m/s^2): 70

For acceleration over the stated value, please contact Rollco.

Mass calculation does not include mass of motor, reduction gear, switches and clamps.

Abs. stroke	Absolute stroke [mm]
A	Distance between carriages [mm]
nc	Number of carriages

Designation	Max. Drive Torque Ma (Nm)	No Load Torque with Strip (Nm)	No Load Torque without Strip (Nm)	Pulley Drive Ratio (mm/rev)	Pulley Diameter
MTJ 40	3.7	0.4	0.2	99	31.51

Designation	Belt Type	Belt Width	Max. Force Transmitted by Belt (N)	Specific Spring Constant Cspec (N)	Planar Moment of Inertia Iy (cm^4)	Planar Moment of Inertia Iz (cm^4)
MTJ 40	AT3	20	235	225000	9.8	11.6

Every care has been taken to ensure the accuracy of the information in this document, but we take no liability for any errors or omissions. We reserve the right to make changes without prior notice.

Mass and Mass moment

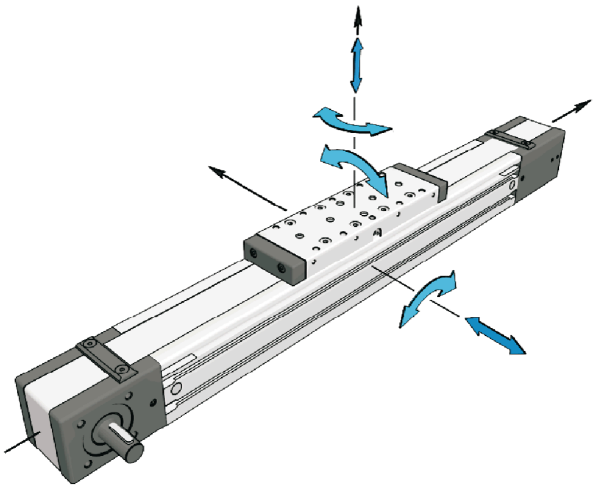

Max. travel speed and max. acceleration of linear unit with the corrosion-resistant protection strip is 1,5 m/s and 50 m/s^2 respectively.

The stated values are for strokes up to 500 mm. No load torque value increases with stroke elongation.

Max. acceleration (m/s^2): 70

For acceleration over the stated value, please contact Rollco.

Mass calculation does not include mass of motor, reduction gear, switches and clamps.

Abs. stroke	Absolute stroke [mm]
A	Distance between carriages [mm]
nc	Number of carriages

Designation	Mass of Linear Unit (kg)	Mass Moment of Inertia (10^{-5} kg m^2)	Planar Moment of Inertia Iy (cm^4)	Planar Moment of Inertia Iz (cm^4)	Moved Mass (kg)
MTJ 40	1.3 + 0.0024 × (Abs. Stroke + (nc - 1) × A) + 0.28 × (nc - 1)	9.7 + 0.0035 × (Abs. Stroke + (nc - 1) × A) + 7.0 × (nc - 1)	9.8	11.6	0.28

Every care has been taken to ensure the accuracy of the information in this document, but we take no liability for any errors or omissions. We reserve the right to make changes without prior notice.