KSZ

Dimensions in mm.

Material: Galvanized steel



Every care has been taken to ensure the accuracy of the information in this document, but we take no liability for any errors or omissions. We reserve the right to make changes without prior notice.

General Data

Designation	Description	Compatible with	Fmax (N)	Mass (kg)
KSZ 32 - 5229	KSZ 32	PNCE 32	F PNCE	0.11
KSZ 40 - 5230	KSZ 40	PNCE 40	F PNCE	0.18
KSZ 50 - 5231	KSZ 50	PNCE 50	F PNCE	0.25
KSZ 63 - 5231	KSZ 63	PNCE 63	F PNCE	0.25
KSZ 80 - 5232	KSZ 80	PNCE 80	24800	0.42
KSZ 100 - 5232	KSZ 100	PNCE 100	24800	0.42

Dimensions

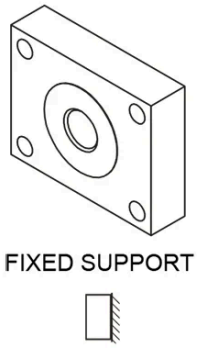

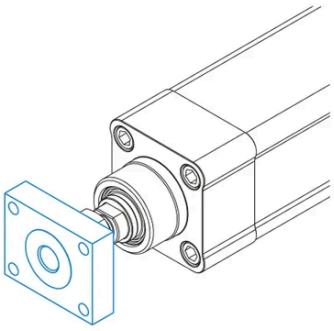

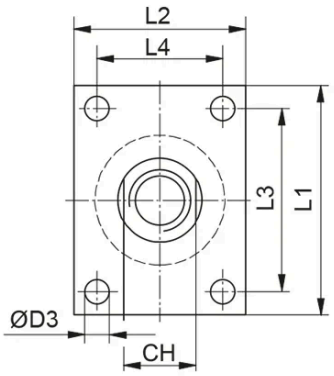

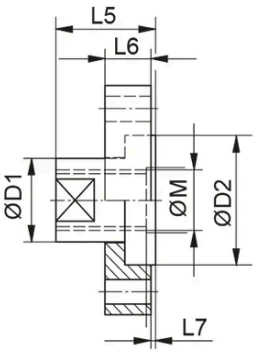

Designation	M	L1	L2	L3	L4	L5	L6	L7	D1
KSZ 32 - 5229	Ø M10 × 1.25	40	35	30	25	20	10	0.1	Ø 17 (-0.2)
KSZ 40 - 5230	Ø M12 × 1.25	50	40	40	30	22	12	0.1	Ø 17 (-0.2)
KSZ 50 - 5231	Ø M16 × 1.5	60	45	48	33	25	12	0.1	Ø 22 (-0.2)
KSZ 63 - 5231	Ø M16 × 1.5	60	45	48	33	25	12	0.1	Ø 22 (-0.2)
KSZ 80 - 5232	Ø M20 × 1.5	72	50	57	35	32	15	0.1	Ø 30 (-0.2)
KSZ 100 - 5232	Ø M20 × 1.5	72	50	57	35	32	15	0.1	Ø 30 (-0.2)

Designation	D2	D3	CH
KSZ 32 - 5229	Ø 26	Ø 5.5 (H13)	15
KSZ 40 - 5230	Ø 26	Ø 5.5 (H13)	15
KSZ 50 - 5231	Ø 34	Ø 6.6 (H13)	19
KSZ 63 - 5231	Ø 34	Ø 6.6 (H13)	19
KSZ 80 - 5232	Ø 44	Ø 9 (H13)	27
KSZ 100 - 5232	Ø 44	Ø 9 (H13)	27

Every care has been taken to ensure the accuracy of the information in this document, but we take no liability for any errors or omissions. We reserve the right to make changes without prior notice.