Flange mounting MAFL

Dimensions in mm.

Mounting screws are included.

Material: Anodized aluminium



Every care has been taken to ensure the accuracy of the information in this document, but we take no liability for any errors or omissions. We reserve the right to make changes without prior notice.

General Data

Designation	Description	Compatible with	Material	Fmax (N)	Mass (kg)
MAFL 25 - 108624	MAFL 25	MCE 25	Anodized aluminium	F MCE	0.03
MAFL 32 - 108625	MAFL 32	MCE 32	Anodized aluminium	F MCE	0.06
MAFL 45 - 108626	MAFL 45	MCE 45	Anodized aluminium	F MCE	0.11

Dimensions

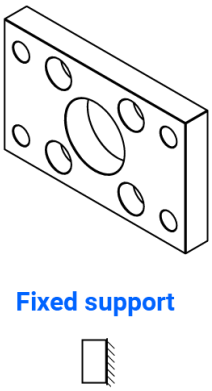

Fixed support

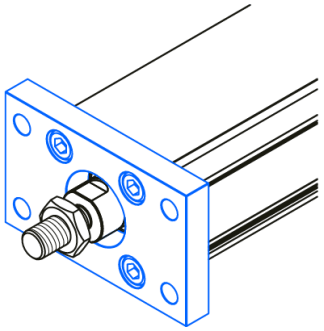

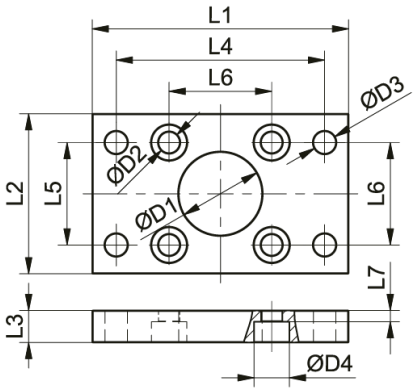

Designation	L1	L2	L3	L4	L5	L6	L7	D1	D2
MAFL 25 - 108624	55	29	8	43	-	21	5.1	18	2.9
MAFL 32 - 108625	70	36	10	55	-	22	5.5	20	4.5
MAFL 45 - 108626	80	50	10	65	32	32	3.5	26	6.6

Designation	D3	D4
MAFL 25 - 108624	5.5	5.5
MAFL 32 - 108625	6.5	8
MAFL 45 - 108626	7	11

Every care has been taken to ensure the accuracy of the information in this document, but we take no liability for any errors or omissions. We reserve the right to make changes without prior notice.