MSCE



Mini electric slider MSCE is a mini linear drive with an integrated linear guiding system and slide. By using an integrated precision ball screw drive, the rotary motion (rotation) of the drive shaft is converted to the linear motion (translation) of the slide with high mechanical efficiency and low internal friction.

A preassembled standard motor (in-line with a motor adapter and a coupling or in-parallel with a motor side drive and a timing belt) together with the standard drive, makes the system plug and play ready. Compact dimensions and optimally selected motor combinations cover a wide range of applications.

The aluminium base profile includes T-slots on the bottom for fixing the electric slider, as well as side slots for clamping fixtures and magnetic field sensors.

The aluminium slide and the front plate of the electric slider allow a wide range of options for mounting the working tools and attaching additional accessories. There are prepared connection holes on the slide and the front plate for an easy combination of the MSCEs to the multiaxis system, which makes this product highly flexible. There is also an option of the mini electric slider without the preassembled motor if an individual motor is required.

Positioning rod together with the rod seal ensures the protection of the ball screw drive from dust and other contamination.

Each MSCE is optimally pre-lubricated and ready for a maintenance-free operating process.

Note!
All the data of the dynamic load capacities (linear guiding system and ball screw drive) stated in the tables are theoretical without considering any safety factor. The safety factor depends on the application and its requested safety and service life.

We recommend a minimum dynamic safety factor of 5,0 or more. Please refer to the Technical Information document where the calculation of the safety factor of the ball screw drive and the linear guiding system and how the applied load affects the service life are presented.

Dimensions in mm. The scale of the drawings may not be equal.

Please see the attached Technical information document for further information and data.

Contact us if you have questions or need additional information.

Absolute Stroke: 25, 50, 75, 100, 125, 150, 175, 200

Every care has been taken to ensure the accuracy of the information in this document, but we take no liability for any errors or omissions. We reserve the right to make changes without prior notice.

Max. Stroke (mm): 200
Max. Repeatability (mm): ±0.015 (valid for one-directional axial load)
Max. Acceleration (m/s): 20
Width (mm): 25.0 / 32.0 / 45.0 (base profile)
Height (mm): 36.5 / 45.0 / 60.5 (base profile + slide)
Ambient Temperature (°C): 0 – +50 (0 – +60 without a motor)
Protection Class: IP40
Duty Cycle: 100%
Maintenance: Life-time pre-lubricated





Combination with a standard motor and a motor adapter VK

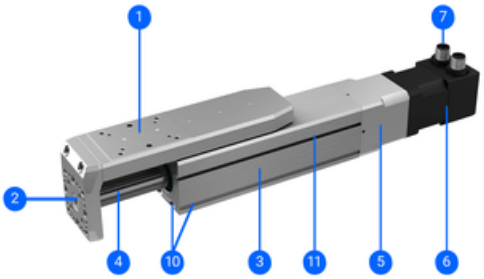

1 – Aluminium slide with an integrated linear guiding system
2 – Front plate
3 – Compact aluminium base profile
4 – Positioning rod
5 – Motor adapter VK with a coupling
6 – Preassembled motor (with/without a brake)
7 – Standard connectors (motor, encoder and a brake – optionally)
10 – Slots for mounting
11 – Slots for the magnetic field sensors (size 32 and 45) or mounting the sensor holder (size 25)

Combination with a standard motor and a motor side drive MSD

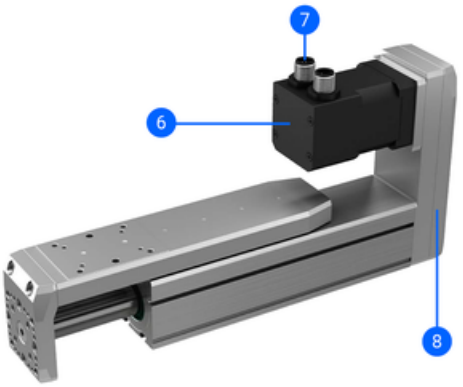

6 – Preassembled motor (with/without a brake)
7 – Standard connectors (motor, encoder and a brake – optionally)
8 – Motor side drive with a timing belt

Every care has been taken to ensure the accuracy of the information in this document, but we take no liability for any errors or omissions. We reserve the right to make changes without prior notice.

Without a motor

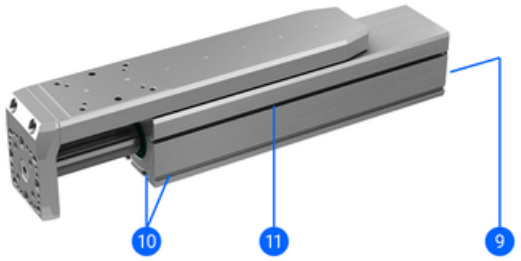

9 – Drive shaft of a precision ball screw drive
10 – Slots for mounting
11 – Slots for the magnetic field sensors (size 32 and 45) or mounting the sensor holder (size 25)

General Data

The values dynamic load capacity and dynamic moments of the linear guiding system and dynamic axial load capacity of the ball screw drive are the basis for calculating the service life.

Max. permissible axial load value depends on the selected motor, travel speed and acceleration of the slide.

Max. permissible axial load, payload and max. travel speed values are valid for the entire stroke range.

Max. horizontal permissible payload vvalid for the payload to be pushed and supported by an external guiding (coefficient of friction 0,1 is taken into consideration).

The moved mass is already considered in the equation for calculating the mass of the mini electric slider m_{MSCE} and the mass moment of inertia J_{MSCE}. The moved mass includes the mass of the aluminium slide together with the front plate and positioning rod with the ball nut.

For combination with standard motor and motor adapter VK or motor side drive MSD, the mass of the mini electric slider m_{MSCE}, should be increased by mass of the motor and motor adapter VK or mass of the motor and motor side drive MSD respectively. See table below.

Abs. stroke	Absolute stroke [mm]
m_{load}	Applied mass to be moved [kg]

Every care has been taken to ensure the accuracy of the information in this document, but we take no liability for any errors or omissions. We reserve the right to make changes without prior notice.

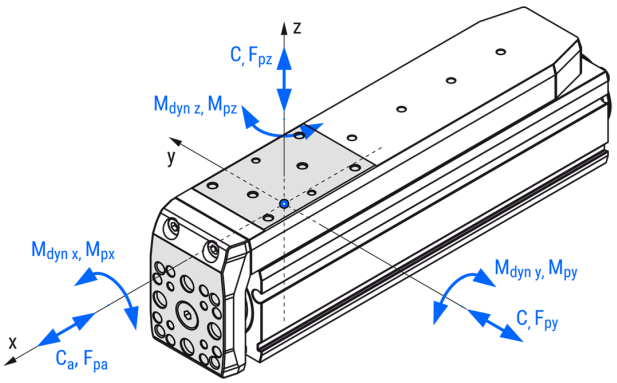

Designation	Description	Ball Screw (d x l)	Dynamic Load Capacity C (N)	Max. Drive Torque M_p (Nm)	Max. Travel Speed Vmax (m/s)
MSCE25-6x2	Without motor	6 × 2 mm	1310	0.06	0.150
MSCE25-6x6	Without motor	6 × 6 mm	1310	0.1	0.450
MSCE32-8x2	Without motor	8 × 2 mm	2135	0.13	0.150
MSCE32-8x8	Without motor	8 × 8 mm	2135	0.53	0.600
MSCE45-10x3	Without motor	10 × 3 mm	3240	0.37	0.225
MSCE45-10x10	Without motor	10 × 10 mm	3240	1.23	0.750

Designation	Max. Rotational Speed nmax (min^{-1}) (rev/min)	No Load Torque M_0 (Nm)	Axial Dynamic Load Capacity Ca (N)	Max. Permissible Axial Load Fpa (N)	Max. Permissible Payload Horizontal mph (kg)	Max. Permissible Payload Vertical mpv (kg)
MSCE25-6x2	4500	0.03	1900	170	57	14
MSCE25-6x6	4500	0.03	1700	90	30	7
MSCE32-8x2	4500	0.05	2000	375	125	31
MSCE32-8x8	4500	0.06	1500	375	125	31
MSCE45-10x3	4500	0.08	3500	695	233	58
MSCE45-10x10	4500	0.10	3200	695	233	58

Designation	Max. Permissible Radial Load on Shaft Fpr (N)	Dynamic Moment Mx (Nm)	Dynamic Moment My (Nm)	Dynamic Moment Mz (Nm)	Max. Permissible Loads Forces Fpy (N)	Max. Permissible Loads Forces Fpz (N)
MSCE25-6x2	25	4.8	4.1	4.1	280	580
MSCE25-6x6	25	4.8	4.1	4.1	280	580
MSCE32-8x2	50	10	6.8	6.8	860	860
MSCE32-8x8	50	10	6.8	6.8	860	860
MSCE45-10x3	100	20.1	17.4	17.4	1000	1000
MSCE45-10x10	100	20.1	17.4	17.4	1000	1000

Designation	Max. Permissible Loads Moments Mpx (Nm)	Max. Permissible Loads Moments Mpy (Nm)	Max. Permissible Loads Moments Mpz (Nm)	Moved Mass (kg)	Mass of the Mini Electric Slider mMSCE (kg)	Mass Moment of Inertia JMSCE (10^{-2} kg cm^2)
MSCE25-6x2	4.8	4.1	4.1	0.10 + 0.0010 × Abs. stroke	0.20 + 0.0019 × Abs. stroke	0.29 + 0.0007 × Abs. stroke + 0.1013 × mload

Every care has been taken to ensure the accuracy of the information in this document, but we take no liability for any errors or omissions. We reserve the right to make changes without prior notice.

Designation	Max. Permissible Loads Moments Mpx (Nm)	Max. Permissible Loads Moments Mpy (Nm)	Max. Permissible Loads Moments Mpz (Nm)	Moved Mass (kg)	Mass of the Mini Electric Slider mMSCE (kg)	Mass Moment of Inertia JMSCE (10^{-2} kg cm²)
MSCE25-6x6	4.8	4.1	4.1	0.10 + 0.0010 × Abs. stroke	0.20 + 0.0019 × Abs. stroke	0.36 + 0.0016 × Abs. stroke + 0.9119 × mload
MSCE32-8x2	10	6.8	6.8	0.18 + 0.0013 × Abs. stroke	0.40 + 0.0032 × Abs. stroke	0.71 + 0.0026 × Abs. stroke + 0.1013 × mload
MSCE32-8x8	10	6.8	6.8	0.18 + 0.0013 × Abs. stroke	0.40 + 0.0032 × Abs. stroke	0.99 + 0.0047 × Abs. stroke + 1.6211 × mload
MSCE45-10x3	16.3	16.3	16.3	0.36 + 0.0025 × Abs. stroke	0.88 + 0.0059 × Abs. stroke	2.81 + 0.0061 × Abs. stroke + 0.2280 × mload
MSCE45-10x10	16.3	16.3	16.3	0.36 + 0.0025 × Abs. stroke	0.88 + 0.0059 × Abs. stroke	3.63 + 0.0121 × Abs. stroke + 2.5330 × mload

Designation	Planar Moment of Inertia Iy (cm⁴)	Planar Moment of Inertia Iz (cm⁴)
MSCE25-6x2	0.08 (slide) / 2.10 (base profile)	0.88 (slide) / 1.98 (base profile)
MSCE25-6x6	0.08 (slide) / 2.10 (base profile)	0.88 (slide) / 1.98 (base profile)
MSCE32-8x2	0.18 (slide) / 6.42 (base profile)	2.16 (slide) / 6.58 (base profile)
MSCE32-8x8	0.18 (slide) / 6.42 (base profile)	2.16 (slide) / 6.58 (base profile)
MSCE45-10x3	0.40 (slide) / 25.37 (base profile)	7.34 (slide) / 25.16 (base profile)
MSCE45-10x10	0.40 (slide) / 25.37 (base profile)	7.34 (slide) / 25.16 (base profile)

Dimensions

MSCE without a motor

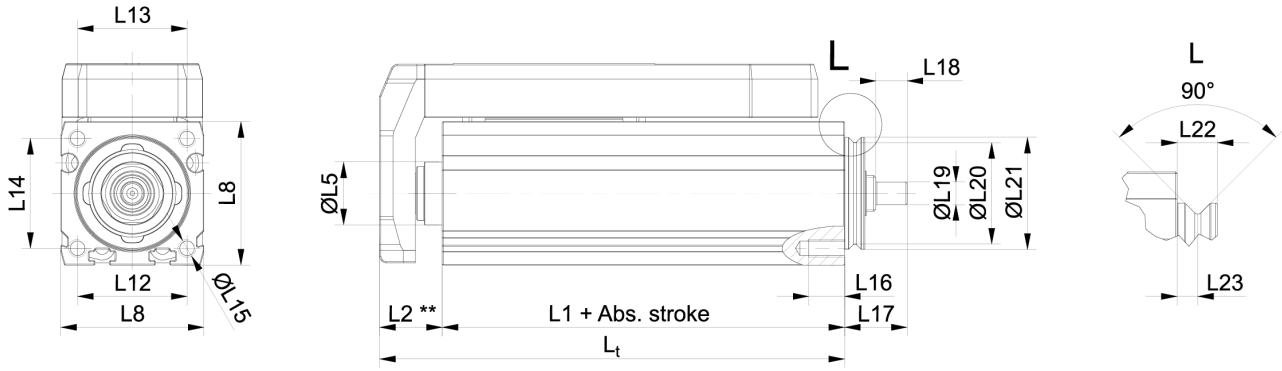

Designation	L1	L2	L3	L4	L5	L6	L7	L8	L9
MSCE25-6x2	50	12	6	6	Ø 12	36.5	58	25	13.5
MSCE25-6x6	50	12	6	6	Ø 12	36.5	58	25	13.5
MSCE32-8x2	65	14	8	6	Ø 14	45	73	32	13.5
MSCE32-8x8	65	14	8	6	Ø 14	45	73	32	13.5
MSCE45-10x3	80	18	10	8	Ø 18	60.5	91	45	20
MSCE45-10x10	80	18	10	8	Ø 18	60.5	91	45	20

Every care has been taken to ensure the accuracy of the information in this document, but we take no liability for any errors or omissions. We reserve the right to make changes without prior notice.

Designation	L10	L11	L12	L13	L14	L15	L16	L17	L18	L19
MSCE25-6x2	19.25	4.4	19	17	18	Ø M2.5	8	14	7	Ø 5 (h7)
MSCE25-6x6	19.25	4.4	19	17	18	Ø M2.5	8	14	7	Ø 5 (h7)
MSCE32-8x2	22.8	4.4	24.5	24.5	24.5	Ø M3	8	14	7	Ø 5 (h7)
MSCE32-8x8	22.8	4.4	24.5	24.5	24.5	Ø M3	8	14	7	Ø 5 (h7)
MSCE45-10x3	30.5	4.4	34	34	34	Ø M4	10	16	8	Ø 8 (h7)
MSCE45-10x10	30.5	4.4	34	34	34	Ø M4	10	16	8	Ø 8 (h7)

Designation	L20	L21	L22	L23	U1	U2	U3	U4	U5
MSCE25-6x2	Ø 17.6	Ø 20 (h7)	4.5	2.3	2.2	4.2	2.8	1.4	1
MSCE25-6x6	Ø 17.6	Ø 20 (h7)	4.5	2.3	2.2	4.2	2.8	1.4	1
MSCE32-8x2	Ø 22.6	Ø 25 (h7)	4.5	2.3	3.2	5.8	3.6	2	1
MSCE32-8x8	Ø 22.6	Ø 25 (h7)	4.5	2.3	3.2	5.8	3.6	2	1
MSCE45-10x3	Ø 31.6	Ø 34 (h7)	4.5	2.3	4.2	7.5	4.7	2.5	1.2
MSCE45-10x10	Ø 31.6	Ø 34 (h7)	4.5	2.3	4.2	7.5	4.7	2.5	1.2

Every care has been taken to ensure the accuracy of the information in this document, but we take no liability for any errors or omissions. We reserve the right to make changes without prior notice.