3045 - 100% Extension



Closed Length ± 0.5 mm
Extension length ± 3 mm
F ± 0.5 mm

Recommended fastening screws ISO 7380 M4 sliding element, ISO7380 M5 bottom element. If use of other fastening screw for bottom element use max size M5 and make sure the head of the screw fits inside the guide.

*Inner rail can be demounted to facilitate assembly or maintenance. It is important that the rail is remounted only on its original telescopic slide.

System Load Capacity value refers to a pair of rails.
All dimensions in mm.

Material: Cold-drawn steel profile, zinc plated
Extension: 100%

Every care has been taken to ensure the accuracy of the information in this document, but we take no liability for any errors or omissions. We reserve the right to make changes without prior notice.

General Data

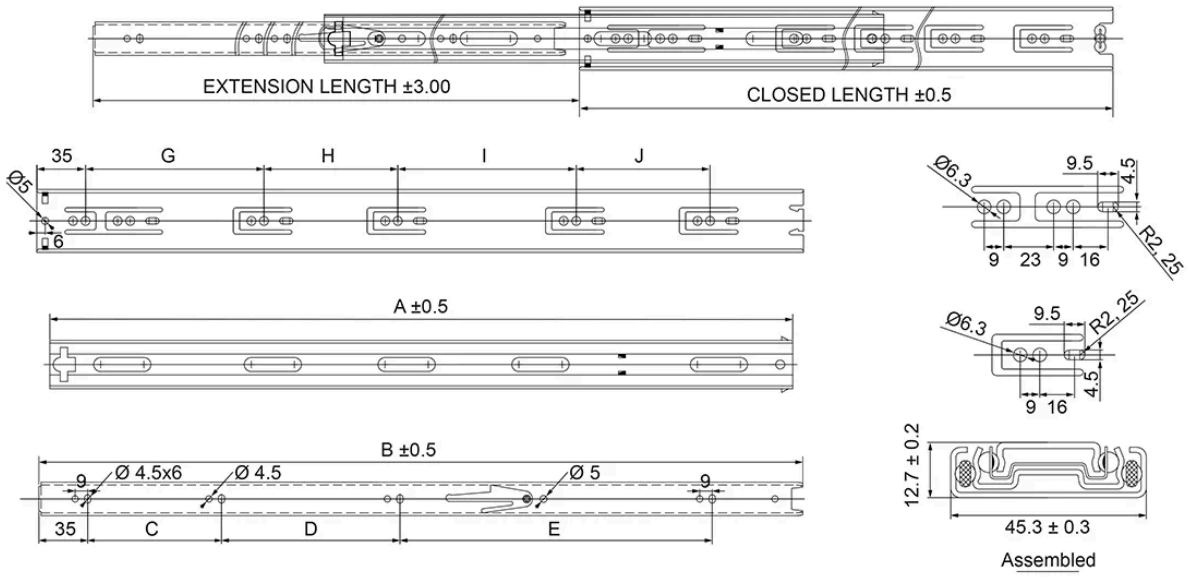

Designation	Closed Length	Extension Length	System Load Capacity (N)	Weight/pc (kg)
3045-250	250	254	450	0.35
3045-300	300	305	450	0.42
3045-350	350	356	450	0.49
3045-400	400	406	450	0.56
3045-450	450	457	450	0.63
3045-500	500	508	400	0.7
3045-550	550	558	360	0.77
3045-600	600	609	320	0.84
3045-650	650	660	290	0.91
3045-700	700	711	260	0.98

Every care has been taken to ensure the accuracy of the information in this document, but we take no liability for any errors or omissions. We reserve the right to make changes without prior notice.

Dimensions

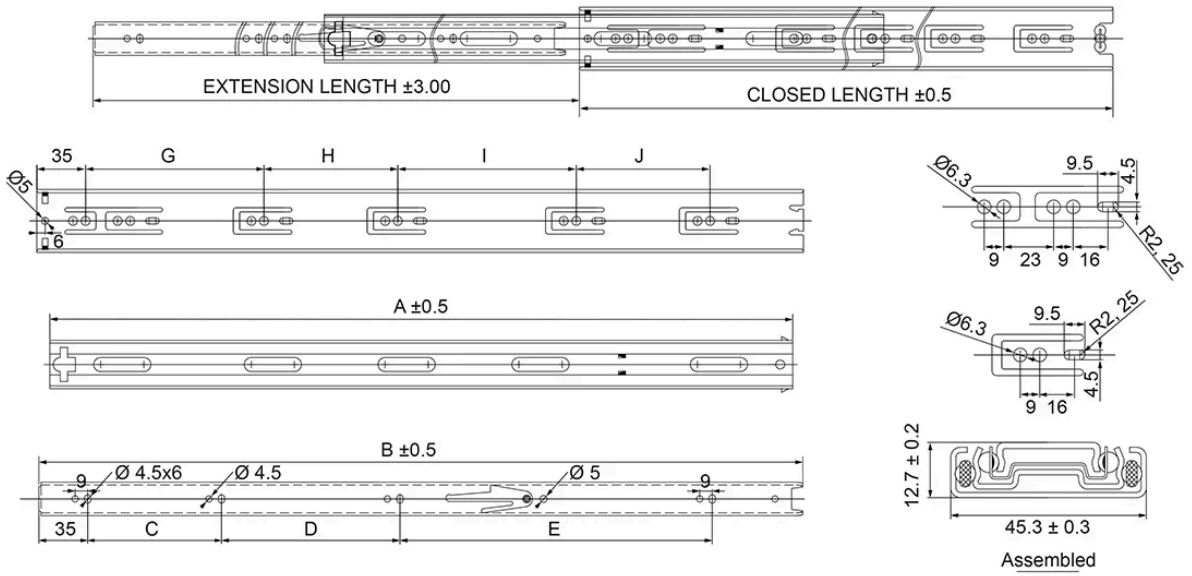

Designation	A	B	C	D	E	G	H	I	J
3045-250	233	248	96	96	-	160 (±0.15)	-	-	-
3045-300	283	298	96	128	-	128	64	-	-
3045-350	333	348	96	64	96	128	96	-	-
3045-400	383	398	96	64	128	128	96	96	-
3045-450	433	448	96	96	160	128	96	128	-
3045-500	483	498	96	96	192	128	96	128	64
3045-550	533	548	96	128	224	128	96	128	96
3045-600	583	598	96	160	224	128	96	128	128
3045-650	633	648	96	160	256	128	96	128	192
3045-700	683	698	96	192	256	128	96	128	224

Every care has been taken to ensure the accuracy of the information in this document, but we take no liability for any errors or omissions. We reserve the right to make changes without prior notice.