Pivoting Slot Nut, 10.5 × 6.3 mm

System: 30 - Slot 6
Type: T-nuts



Every care has been taken to ensure the accuracy of the information in this document, but we take no liability for any errors or omissions. We reserve the right to make changes without prior notice.

General Data

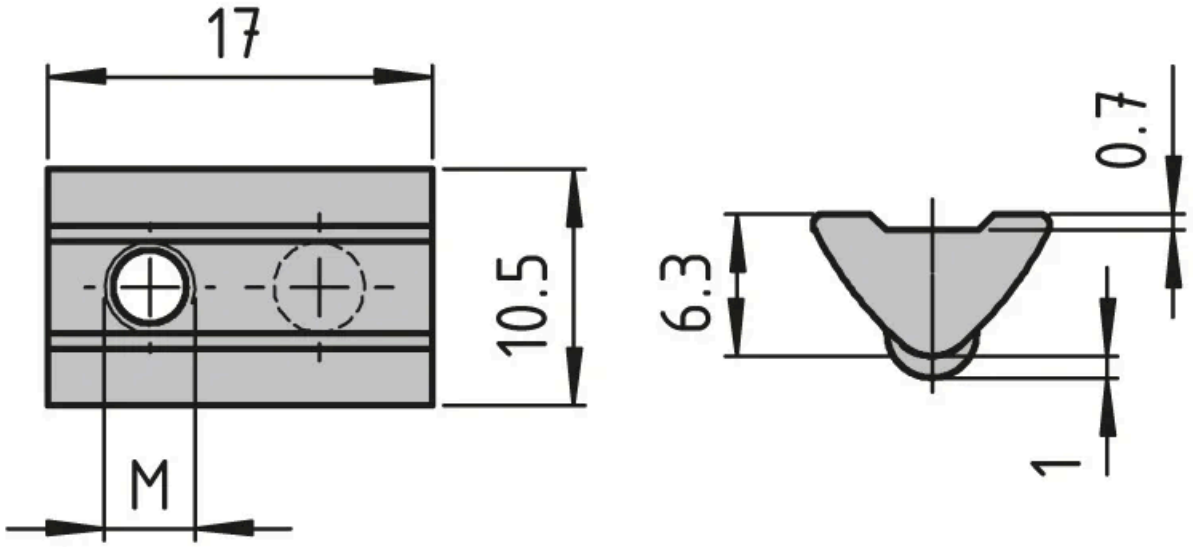

Designation	System	Material	Thread	Fmax (N)
PN3914	30 - Slot 6	Galvanised Steel	M3	500
PN3010	30 - Slot 6	Galvanised Steel	M4	1750
PN3015	30 - Slot 6	Galvanised Steel	M5	1750
PN3020	30 - Slot 6	Galvanised Steel	M6	1750
PN3030	30 - Slot 6	Stainless Steel	M5	1400
PN3025	30 - Slot 6	Stainless Steel	M6	1400

Every care has been taken to ensure the accuracy of the information in this document, but we take no liability for any errors or omissions. We reserve the right to make changes without prior notice.