Pivoting Double Slot Nut, 10.5 mm

System: 30 - Slot 6
Type: T-nuts



Every care has been taken to ensure the accuracy of the information in this document, but we take no liability for any errors or omissions. We reserve the right to make changes without prior notice.

General Data

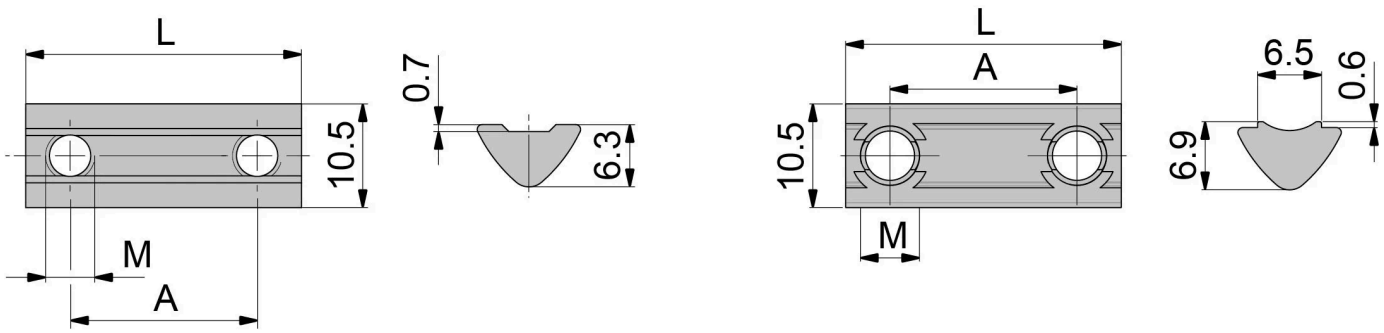

Designation	System	Material	Thread	A	L
PN2006	30 - Slot 6	Galvanised steel	2 x M5	49	58
PN3115	30 - Slot 6	Galvanised steel	2 x M6	19	28
PN3125	30 - Slot 6	Galvanised steel	2 x M6	47	58
PN2007	30 - Slot 6	Galvanised steel	2 × M5	19	28
PN2008	30 - Slot 6	Galvanised steel	2 × M5	49	58
PN2009	30 - Slot 6	Galvanised steel	2 × M6	19	28
PN2010	30 - Slot 6	Galvanised steel	2 × M6	49	58
PN2011	30 - Slot 6	Galvanised steel	No	-	1500

Designation	Step	Fmax (N)
PN2006	No	1750
PN3115	No	1750
PN3125	No	1750
PN2007	Yes	1750
PN2008	Yes	1750
PN2009	Yes	1750
PN2010	Yes	1750
PN2011	Yes	-

Every care has been taken to ensure the accuracy of the information in this document, but we take no liability for any errors or omissions. We reserve the right to make changes without prior notice.