Automatic Butt Connector

Use the automatic butt connector to quickly and easily link the face ends of two profiles from the same series without having to machine the profiles beforehand. Best practice is to use the automatic butt connectors in pairs. You may need several pairs, depending on the size and load on the profiles. Package includes the screw and cutting bush. Note: The load values refer to connectors installed in pairs

System: 30 - Slot 6; 20 - Slot 5; 40 - Slot 8
Type: Fasteners



Every care has been taken to ensure the accuracy of the information in this document, but we take no liability for any errors or omissions. We reserve the right to make changes without prior notice.

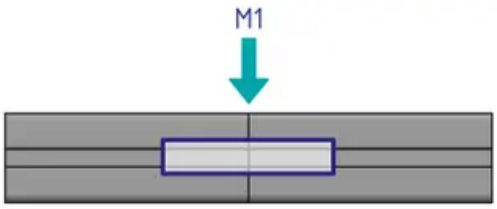

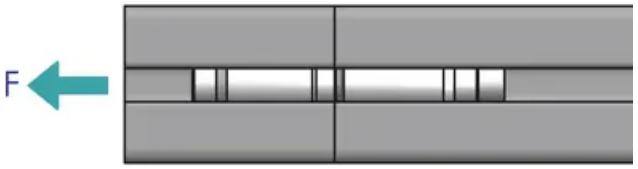

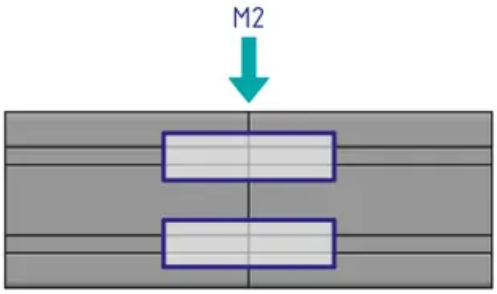



Every care has been taken to ensure the accuracy of the information in this document, but we take no liability for any errors or omissions. We reserve the right to make changes without prior notice.

General Data

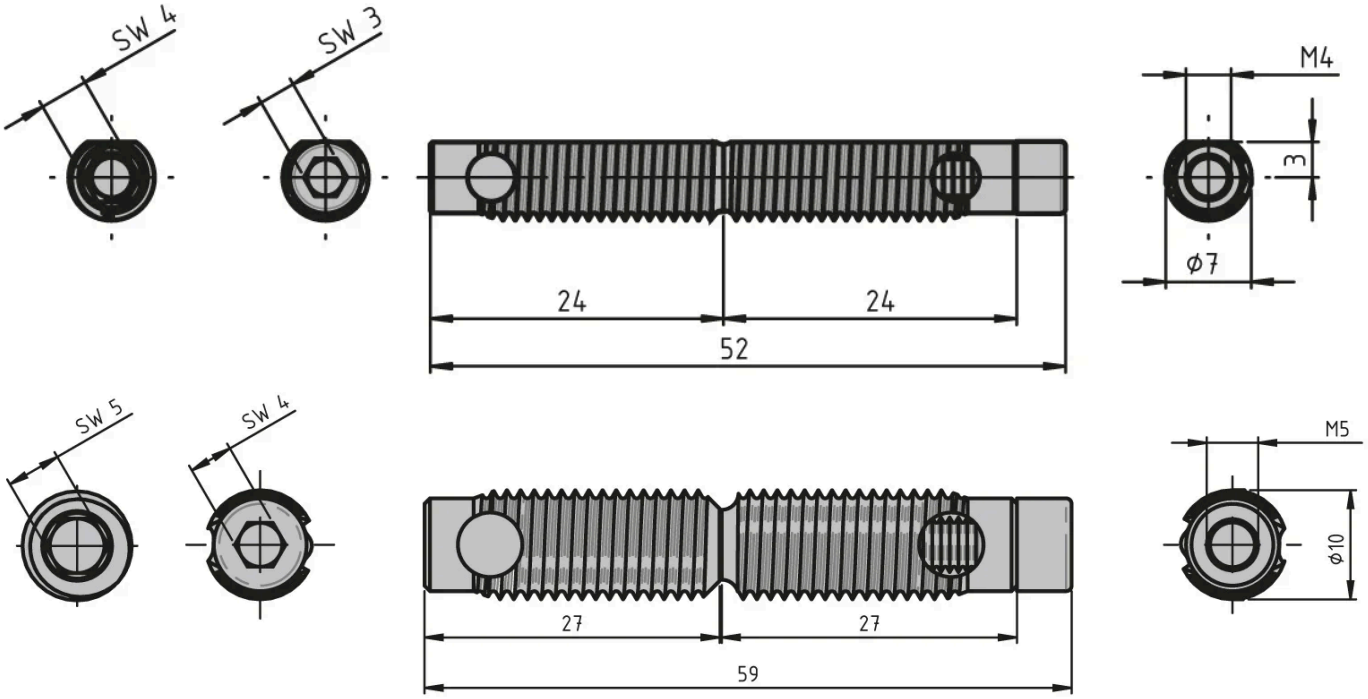

Designation	Description	System	M (Nm)	F (N)
RF4040	Set of automatic butt connectors	20 - Slot 5	22	1500
RF3050	Set of automatic butt connectors	30 - Slot 6	45	1800
RF1210	Set of automatic butt connectors	30 - Slot 6	45	1800
RF1105	Set of automatic butt connectors	40 - Slot 8	140 (40x40L) / 170 (40x40)	4500

Every care has been taken to ensure the accuracy of the information in this document, but we take no liability for any errors or omissions. We reserve the right to make changes without prior notice.