Tie Plates

Links two aluminium profiles.

Note: To install the ESD-ready tie plates, use a notched slot nut in order to make a conductive link.

System: 20 - Slot 5; 30 - Slot 6
Type: Angles Brackets and Corners; Fasteners



Every care has been taken to ensure the accuracy of the information in this document, but we take no liability for any errors or omissions. We reserve the right to make changes without prior notice.



Tie plate loads

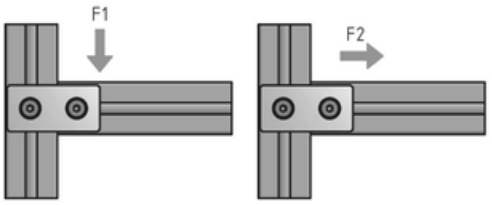

Size	F1 (N)	F2 (N)
20x40	250	300
20x80	350	400
30x60	400	550
30x60	700	800
30x60	700	800

General Data

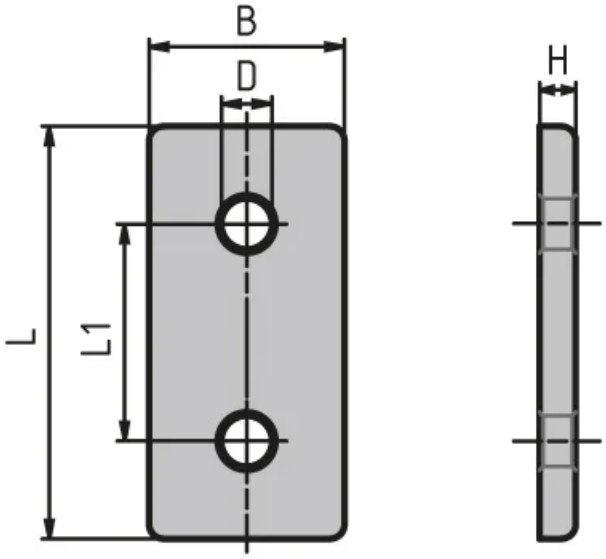

Designation	Description	Material	B	D	H
PV1215	Tie plate 20 × 40 mm	Black powder coated steel	20	5.5	3
PV1216	Tie plate 20 × 40 mm	Nickel-plated aluminium, matt	18	5.5	4
PV1217	Tie plate 20 × 80 mm	Nickel-plated aluminium, matt	18	5.5	5
PV1218	Tie plate 30 × 60 mm	Nickel-plated aluminium, matt	27	7	5
PZ3055	Tie plate 30 × 60 mm	Black powder coated	30	CountersinkDIN74-Am6	3
PV1219	Tie plate 30 × 60 mm	Galvanised steel	30	11	3

Designation	L	ESD	L1	Recommended screw size	Screw Type
PV1215	40	-	20	ISO7380 M5×8	ISO7380 M5×8
PV1216	38	Yes	20	ISO7380 M5×8	ISO7380 M5×8
PV1217	78	Yes	20	ISO7380 M5×8	M6 × 8 (ISO7380)
PV1218	57	-	30	ISO7380 M6×12	ISO7380 M6×12
PZ3055	60	-	30	ISO7991 M6 × 10	ISO7991 M6 × 10

Every care has been taken to ensure the accuracy of the information in this document, but we take no liability for any errors or omissions. We reserve the right to make changes without prior notice.

Designation	L	ESD	L1	Recommended screw size	Screw Type
PV1219	60	Yes	30	ISO7380 M6 × 10	ISO7380 M6 × 10

Every care has been taken to ensure the accuracy of the information in this document, but we take no liability for any errors or omissions. We reserve the right to make changes without prior notice.