Joint 30

Joint with adjustable friction. Creates an articulated link between two profiles or surface elements; use the screw to infinitely vary the joint's friction resistance or to fasten the joint at a defined position.

Note: On-site mount.

System: 30 - Slot 6
Type: Joints



Every care has been taken to ensure the accuracy of the information in this document, but we take no liability for any errors or omissions. We reserve the right to make changes without prior notice.



Joint loads

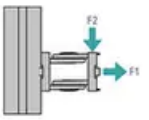

Type	F1 (N)	F2 (N)
Joint 20	500	200
Joint 30	6000	500

General Data

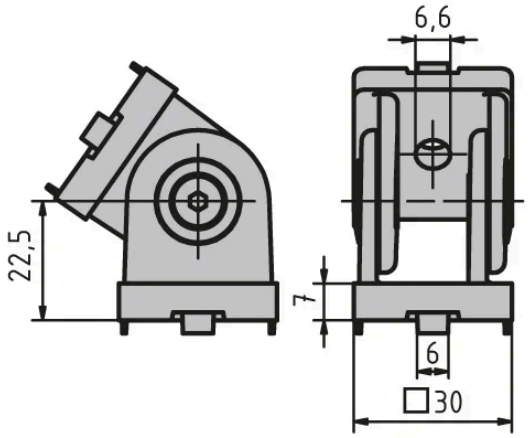

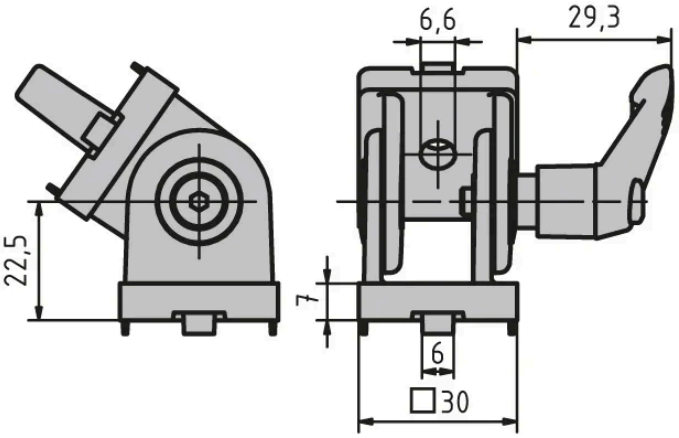

Designation	Description	System	Material
PZ3200	Joint 30	30 - Slot 6	Aluminium coloured die-cast zinc
PZ3205	Joint 30 with clamping lever	30 - Slot 6	Aluminium coloured die-cast zinc

Every care has been taken to ensure the accuracy of the information in this document, but we take no liability for any errors or omissions. We reserve the right to make changes without prior notice.