Angle Set 6 30x30

To connect two aluminum profiles or panels at right angles. The connection angle can be closed with the cover cap. Assembly set includes 1 Cover cap - Plastic PA - black, 2 T-slot nuts - slot 6 - M6, 2 Screws ISO 7380 - M6 × 12

Material: Die-cast zinc. Cover cap, plastic PA glass fiber reinforced. Assembly set, steel.
System: 30 - Slot 6
Type: Angles Brackets and Corners; Fasteners

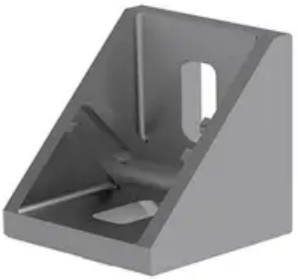

Every care has been taken to ensure the accuracy of the information in this document, but we take no liability for any errors or omissions. We reserve the right to make changes without prior notice.

General Data

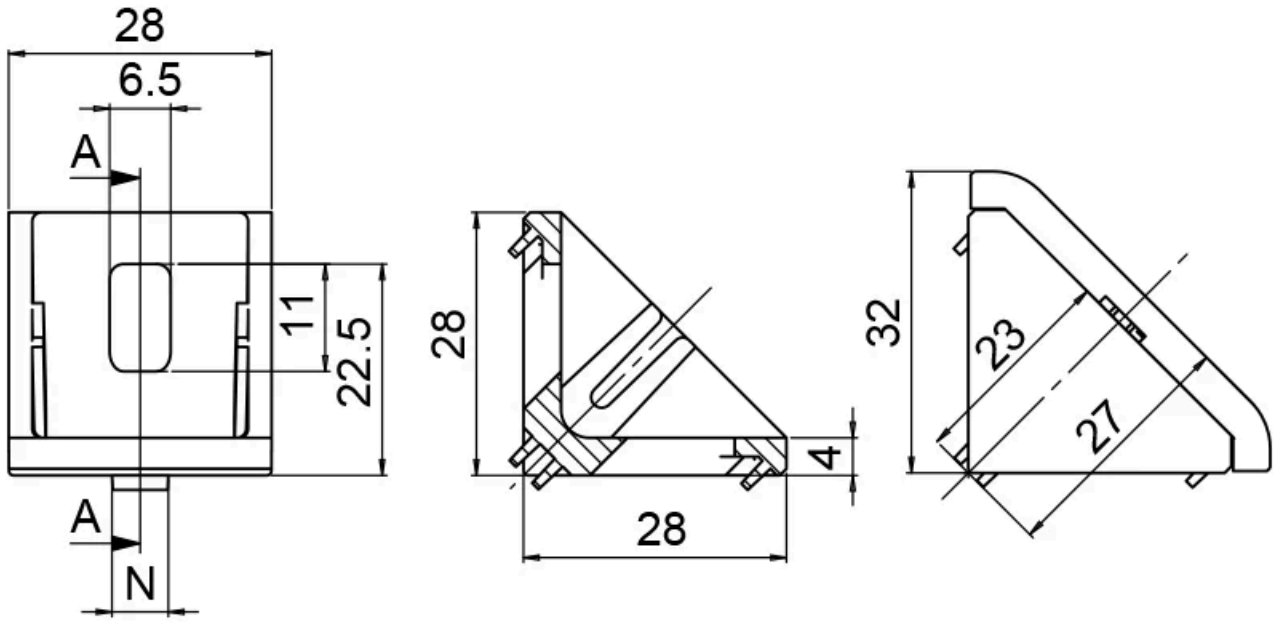

Designation	Description	System	Colour	Weight (g)
PZ3070	Angle Set 6 30x30 Screw M6x12	30 - Slot 6	Cover cap black	68

Every care has been taken to ensure the accuracy of the information in this document, but we take no liability for any errors or omissions. We reserve the right to make changes without prior notice.