Drive units TB40

We offer a standard selection of motors and gears for TB40 timing belt conveyor.
We can customise the drive shaft to accommodate many different motors and gear choices. Please contact Rollco for more information.
Performance data based on continuous operation at nominal voltage, 50 Hz and 1400 rpm motor speed.
For operation using frequency inverter please contact Rollco.



Motors and gears are not assembled to the unit.

Motor Type: Worm gear drive with 4-pole 3-phase 230/400 VAC-50 Hz motor
Protection Class: IP55

Every care has been taken to ensure the accuracy of the information in this document, but we take no liability for any errors or omissions. We reserve the right to make changes without prior notice.

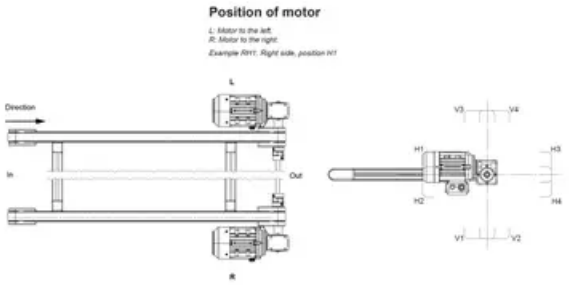

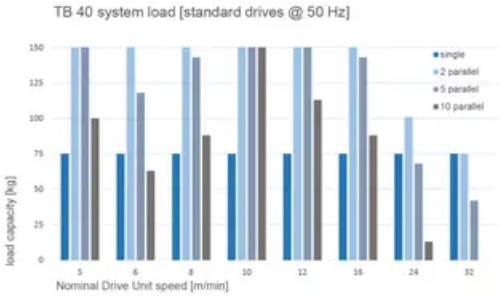

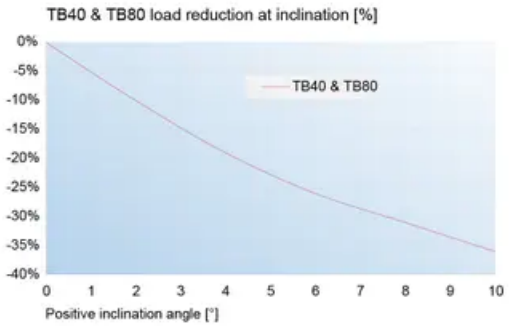

General Data

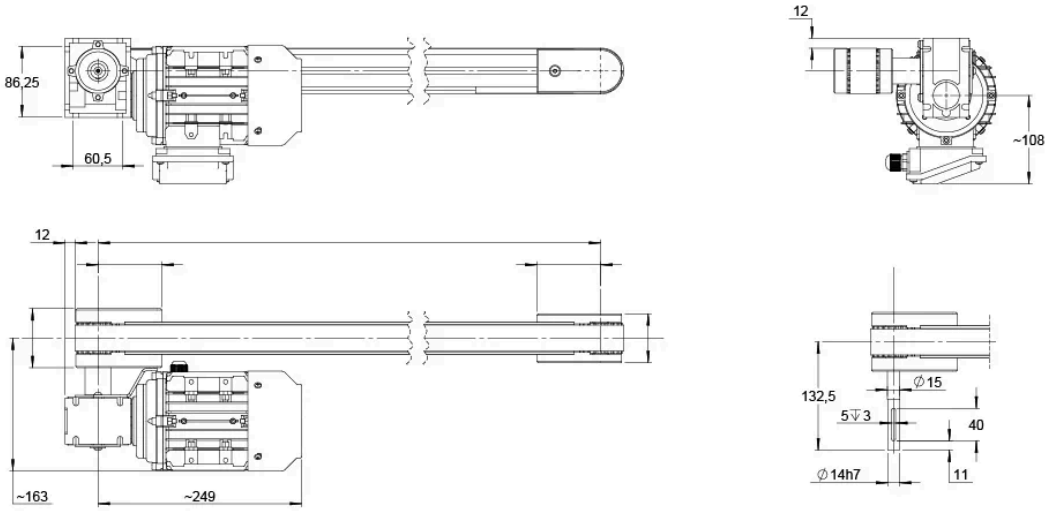

Designation	Speed code	Power (kW)	Conveyor speed at 50 Hz (m/min)	Output speed (rpm) at 50 Hz	Output torque at 50 Hz (Nm)
Driveunit-40-5	5	0.12	4.8	28	17

Every care has been taken to ensure the accuracy of the information in this document, but we take no liability for any errors or omissions. We reserve the right to make changes without prior notice.

Designation	Speed code	Power (kW)	Conveyor speed at 50 Hz (m/min)	Output speed (rpm) at 50 Hz	Output torque at 50 Hz (Nm)
Driveunit-40-6	6	0.12	6	35	14
Driveunit-40-8	8	0.12	7.9	46.7	16
Driveunit-40-10	10	0.18	9.5	56	21
Driveunit-40-12	12	0.18	11.9	70	18
Driveunit-40-16	16	0.18	15.9	93.3	14
Driveunit-40-24	24	0.18	23.8	140	10
Driveunit-40-32	32	0.18	31.7	186.7	7.8

Designation	Gear reduction	Phase current at 400 VAC (A)
Driveunit-40-5	50	0.44
Driveunit-40-6	40	0.44
Driveunit-40-8	30	0.44
Driveunit-40-10	25	0.55
Driveunit-40-12	20	0.55
Driveunit-40-16	15	0.55
Driveunit-40-24	10	0.55
Driveunit-40-32	7.5	0.55

Every care has been taken to ensure the accuracy of the information in this document, but we take no liability for any errors or omissions. We reserve the right to make changes without prior notice.