Automatic Fastening Set 40

Application:
The automatic fastening set is quick and easy to use without modifying the profiles. We recommend installing them in pairs - this is also what the stress data refers to.

Assembly:
Insert the cylinder head screw into the profile slot. Screw the self-tapping hollow screw into the profile slot on the face side. Use a lubricant for this. Mount the slot nut into the profile and tighten the cylinder screw.

Supply:
M6 slot nut and MC6S ISO4762 screw included.



Material: Zinc plated steel
System: 40 - Slot 8
Type: Fasteners

Every care has been taken to ensure the accuracy of the information in this document, but we take no liability for any errors or omissions. We reserve the right to make changes without prior notice.









Cap for slot 8 automatic connector



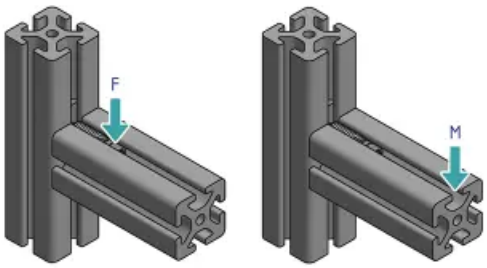

Every care has been taken to ensure the accuracy of the information in this document, but we take no liability for any errors or omissions. We reserve the right to make changes without prior notice.

General Data

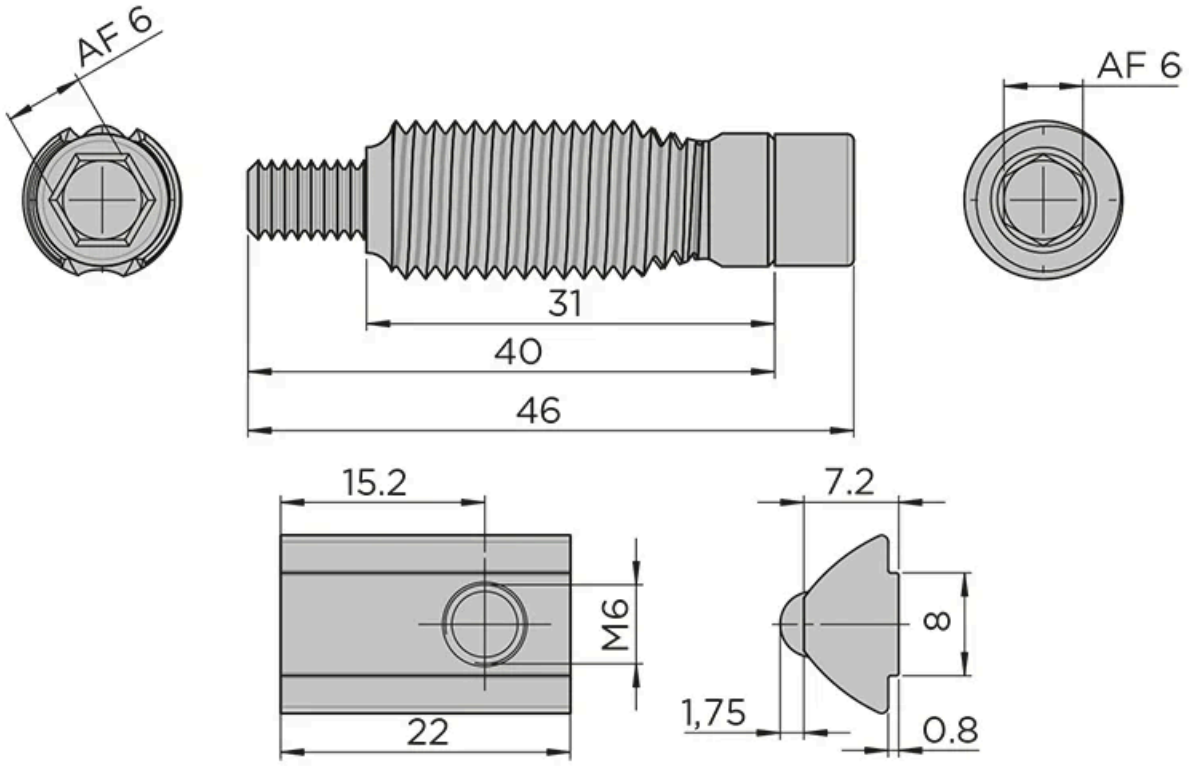

Designation	Description	System	Material	Colour	Slot
RF1102	Automatic connector including slot nut with notched guide step	40 - Slot 8	Zinc plated steel	-	8
RF1101	Cap for slot 8 automatic connector	40 - Slot 8	Plastic (PA)	Grey RAL7042	8

Designation	Fmax (N)	Mmax (Nm)
RF1102	1500	80
RF1101	-	-

Every care has been taken to ensure the accuracy of the information in this document, but we take no liability for any errors or omissions. We reserve the right to make changes without prior notice.