Swivel Castors, Bolt Hole with Lock

Housing made of Polyamide, precision ball bearing in swivel head, bolt hole.
Wheel centre made of Polyamide.
Tread made of Polyurethane, precision ball bearing.

Standard: EN 12530
Hardness of tread: Shore A 92

Material: Polyamide
System: 40 - Slot 8; 30 - Slot 6; 20 - Slot 5
Temperature range (°C): -10° to +40°
Type: Castors



Every care has been taken to ensure the accuracy of the information in this document, but we take no liability for any errors or omissions. We reserve the right to make changes without prior notice.





Every care has been taken to ensure the accuracy of the information in this document, but we take no liability for any errors or omissions. We reserve the right to make changes without prior notice.

General Data

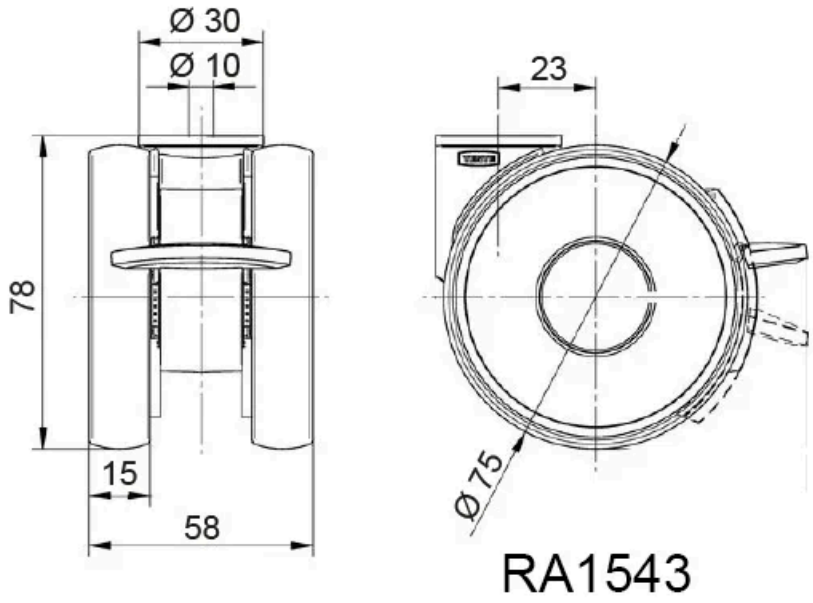

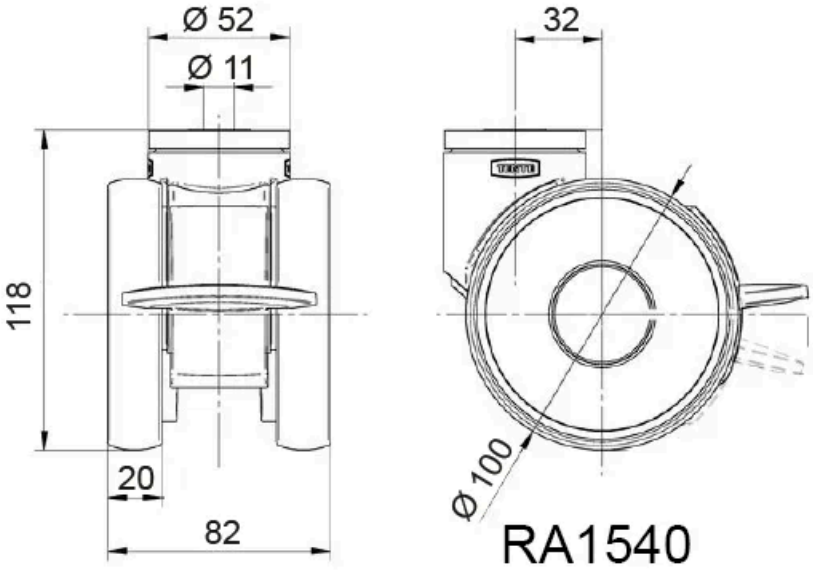

Designation	Description	Wheel Diameter (mm)	Colour	Weight (g)	Swivel Interference (mm)
RA1543	Swivel castor with wheel brake, bolt hole	75	RAL9002	237	156
RA1540	Swivel castor with total lock, bolt hole	100	RAL9002	750	216

Every care has been taken to ensure the accuracy of the information in this document, but we take no liability for any errors or omissions. We reserve the right to make changes without prior notice.

Designation	Load capacity (kg)	Static Load Capacity (kg)
RA1543	90	180
RA1540	100	200

Every care has been taken to ensure the accuracy of the information in this document, but we take no liability for any errors or omissions. We reserve the right to make changes without prior notice.