Adjustable Feet Kit, Trapezoid Base 60 and 80 with anti-slip/vibration plate

Swiveling feet for levelling out uneven floors. Pivoting range of ball-and-socket joint: ± 20.
No mounting holes.
Ball joint Ø15.
Delivered as a kit, not assembled.



Material:
• Base: Die-cast zinc (black powder coat).
• Threaded rod: Steel,surface zinc plated.
• Anti-slip plate: Thermoplastic elastomer ≈ 70 shore A. Oil and water resistant (up to 60 °C).

System: 40 - Slot 8; 30 - Slot 6; 20 - Slot 5
Type: Feet

Every care has been taken to ensure the accuracy of the information in this document, but we take no liability for any errors or omissions. We reserve the right to make changes without prior notice.



Every care has been taken to ensure the accuracy of the information in this document, but we take no liability for any errors or omissions. We reserve the right to make changes without prior notice.

General Data

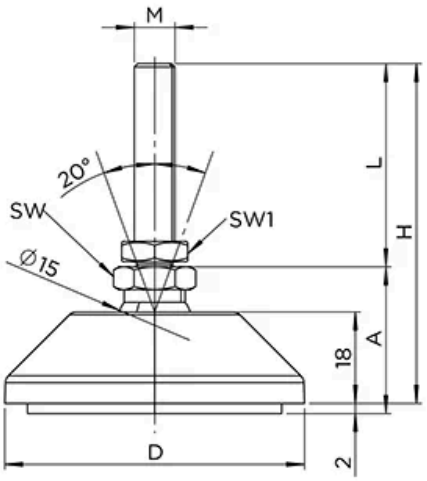

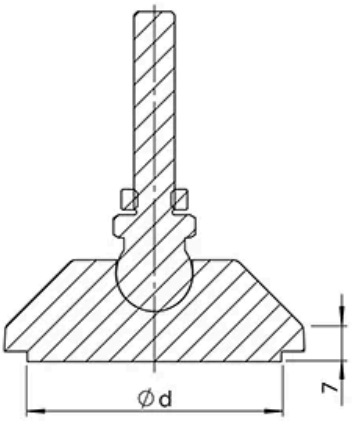

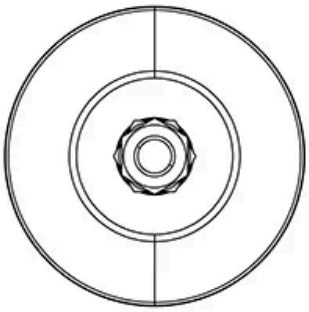

Adjustable Feet, Trapezoid Base 60
with anti-slip/vibration plate
Die-cast zinc with a black powder coat

Designations:
RA7005
RA7012
RA7019
RA7026
RA7033
RA7040
RA7047

Every care has been taken to ensure the accuracy of the information in this document, but we take no liability for any errors or omissions. We reserve the right to make changes without prior notice.

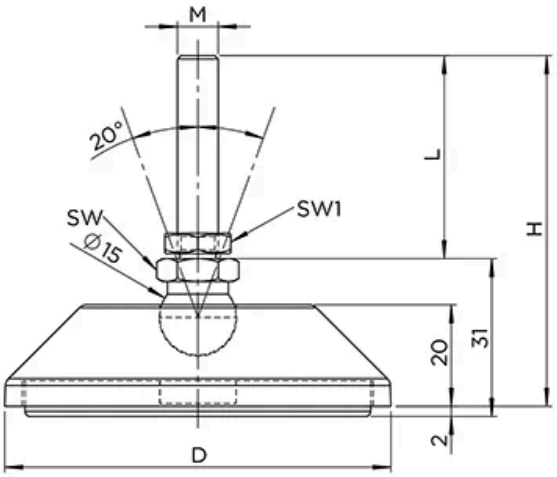

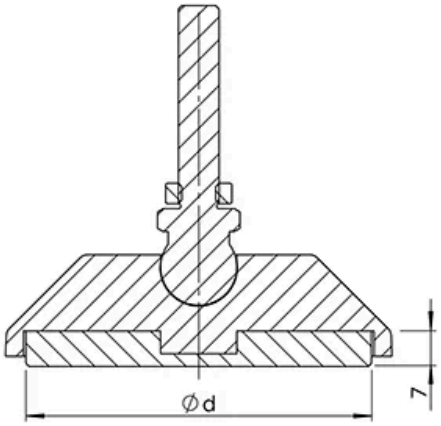

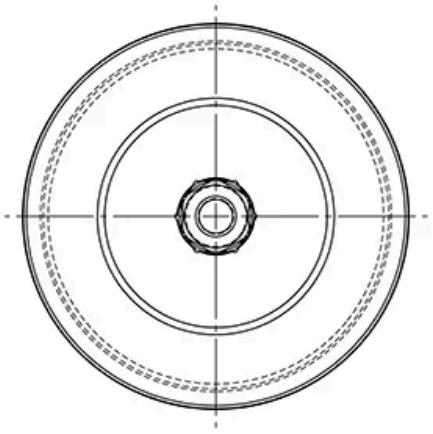

Adjustable Feet, Trapezoid Base 80
with anti-slip/vibration plate
Die-cast zinc with a black powder coat

Designations:
RA7004
RA7011
RA7018
RA7025
RA7032
RA7039
RA7046

Designation	A	D	H	L	M
RA7005	29.5	59	68.9	40	M8
RA7012	29.5	59	109.1	80	M8
RA7019	29.5	59	73.9	45	M10
RA7026	29.5	59	73.9	45	M12
RA7033	29.5	59	153.9	125	M12
RA7040	29.5	59	94.9	66	M16
RA7047	29.5	59	153.9	125	M16
RA7004	29.5	76	71.1	40	M8
RA7011	29.5	76	110.9	80	M8
RA7018	29.5	76	73.9	45	M10
RA7025	29.5	76	73.9	45	M12
RA7032	29.5	76	155.9	125	M12
RA7039	29.5	76	96.9	66	M16
RA7046	29.5	76	155.9	125	M16

Designation	Base	d	Weight (g)	Max. Load (kg)	SW (mm)
RA7005	Die-cast zinc with a black powder coat	50	149	350	14
RA7012	Die-cast zinc with a black powder coat	50	162	350	14

Every care has been taken to ensure the accuracy of the information in this document, but we take no liability for any errors or omissions. We reserve the right to make changes without prior notice.

Designation	Base	d	Weight (g)	Max. Load (kg)	SW (mm)
RA7019	Die-cast zinc with a black powder coat	50	158	470	14
RA7026	Die-cast zinc with a black powder coat	50	168	770	14
RA7033	Die-cast zinc with a black powder coat	50	225	770	14
RA7040	Die-cast zinc with a black powder coat	50	225	1450	17
RA7047	Die-cast zinc with a black powder coat	50	303	1450	17
RA7004	Die-cast zinc with a black powder coat	68	261	350	14
RA7011	Die-cast zinc with a black powder coat	68	274	350	14
RA7018	Die-cast zinc with a black powder coat	68	270	470	14
RA7025	Die-cast zinc with a black powder coat	68	280	770	14
RA7032	Die-cast zinc with a black powder coat	68	337	770	14
RA7039	Die-cast zinc with a black powder coat	68	337	1450	17
RA7046	Die-cast zinc with a black powder coat	68	415	1450	17

Every care has been taken to ensure the accuracy of the information in this document, but we take no liability for any errors or omissions. We reserve the right to make changes without prior notice.